Tektronix®

INSTRUCTION MANUAL

Tektronix®
COMMITTED TO EXCELLENCE

PLEASE CHECK FOR CHANGE INFORMATION AT THE REAR OF THIS MANUAL.

7S12
TDR/SAMPLER
S/N B020000-up

INSTRUCTION MANUAL

Tektronix, Inc.
P.O. Box 500
Beaverton, Oregon 97077

070-1244-00
Product Group 42

Serial Number _____

First Printing NOV 1971
Revised FEB 1988

Copyright © 1971 Tektronix, Inc. All rights reserved. Contents of this publication may not be reproduced in any form without the written permission of Tektronix, Inc.

Products of Tektronix, Inc. and its subsidiaries are covered by U.S. and foreign patents and/or pending patents.

TEKTRONIX, TEK, SCOPE-MOBILE, and are registered trademarks of Tektronix, Inc. TELEQUIPMENT is a registered trademark of Tektronix U.K. Limited.

Printed in U.S.A. Specification and price change privileges are reserved.

INSTRUMENT SERIAL NUMBERS

Each instrument has a serial number on a panel insert, tag, or stamped on the chassis. The first number or letter designates the country of manufacture. The last five digits of the serial number are assigned sequentially and are unique to each instrument. Those manufactured in the United States have six unique digits. The country of manufacture is identified as follows:

B000000	Tektronix, Inc., Beaverton, Oregon, USA
100000	Tektronix Guernsey, Ltd., Channel Islands
200000	Tektronix United Kingdom, Ltd., London
300000	Sony/Tektronix, Japan
700000	Tektronix Holland, NV, Heerenveen, The Netherlands

TABLE OF CONTENTS

SECTION 1	CHARACTERISTICS	Page
	Description	1-1
	Electrical Characteristics	1-1
	Physical Characteristics	1-5
	Environmental Characteristics	1-5

SECTION 2	OPERATING INSTRUCTIONS	
	General Information	2-1
	Installation	2-1
	Controls and Connectors	2-1
	First Time Operation	2-5
	Voltage Reflection Coefficient	2-7
	Impedance Scale Overlays	2-8
	Time or Distance Measurements	2-8
	High Resolution	2-11
	Single Sweep Operation	2-11
	PRESET Calibration	2-12
	Application Connections	2-12
	Using TDR Slide Rule	2-14

SECTION 3	CIRCUIT DESCRIPTION	
	Introduction	3-1
	Vertical Circuits Block Diagram	3-1
	Horizontal Circuits Block Diagram	3-4
	Circuit Description	3-10

SECTION 4	MAINTENANCE	
	Introduction	4-1
	Lubrication	4-1
	Troubleshooting	4-1
	Tape Dial Removal	4-2
	Tape Dial Installation	4-2
	Tape Dial Alignment	4-2

SECTION 4	MAINTENANCE (cont)	Page
	Readout Symbol Adjustment ▷ and ◁	4-2
	Repackaging for Shipment	4-3

SECTION 5	PERFORMANCE CHECK/ADJUSTMENT	
	Introduction	5-1
	Equipment Required	5-1
	Performance Check and Adjustment Record and Index	5-2
	7S12 Checks	5-3
	S-6, S-52 and 7S12 System Checks	5-5
	S-5, S-54 and 7S12 System Checks	5-7
	Adjustment Procedure	5-9

SECTION 6	ELECTRICAL PARTS LIST

SECTION 7	DIAGRAMS AND CIRCUIT BOARD ILLUSTRATIONS
	Symbols and Reference Designators
	Schematic Diagrams and Component Board Locations

SECTION 8	MECHANICAL PARTS LIST
	Mechanical Parts List
	Mechanical Parts List Illustration
	Accessories

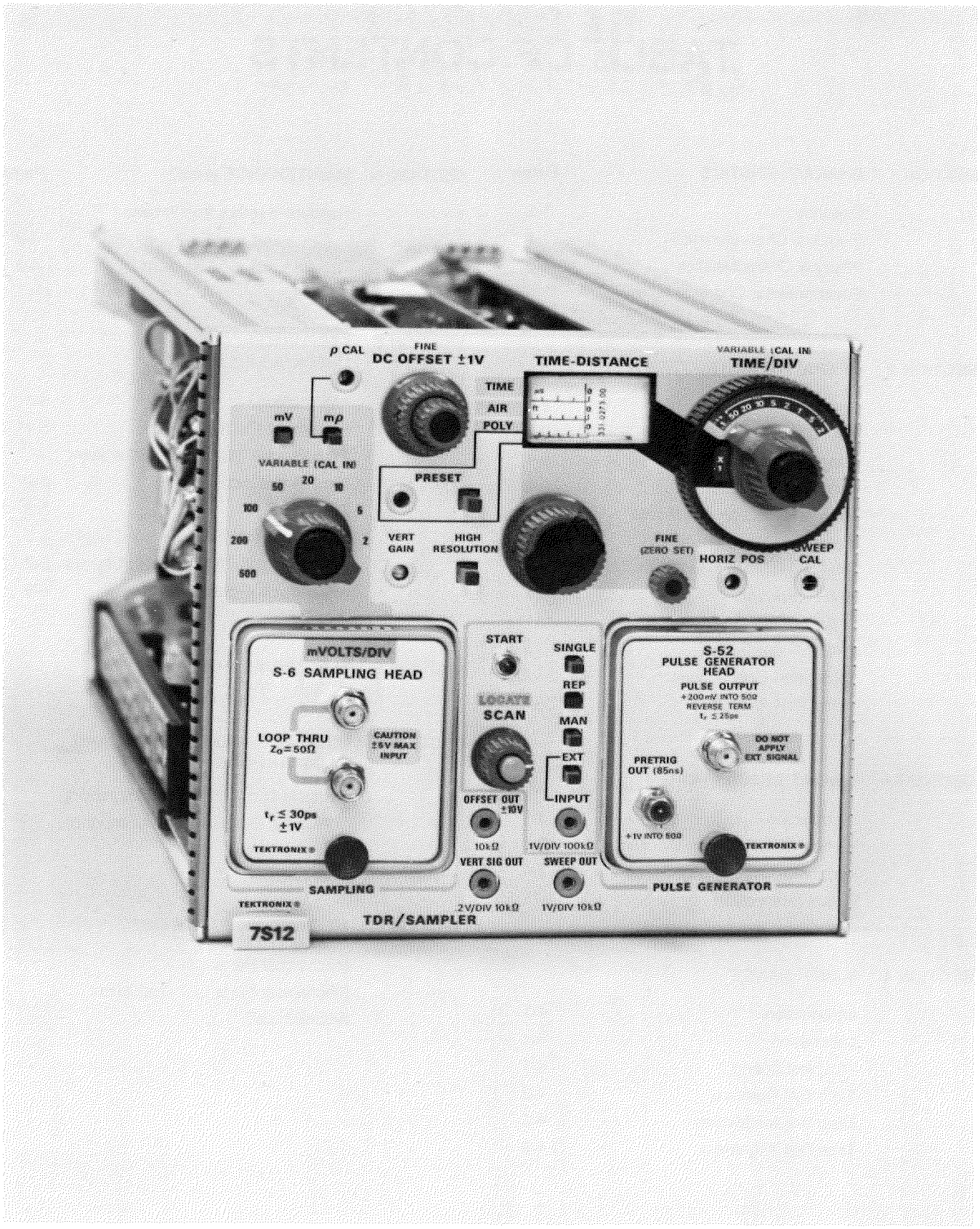

Fig. 1-1. 7S12 TDR/Sampler unit.

SECTION 1
CHARACTERISTICS

Description

The 7S12 is a dual-purpose plug-in unit for measurement of recurring fast-rise signals or for time-domain reflectometry. It occupies two compartments (one vertical input and one horizontal input) of a Tektronix 7000-series oscilloscope.

The 7S12 has two compartments for plug-in heads. The left-hand compartment (labeled SAMPLING on the 7S12 front panel) accepts Tektronix S-series Sampling Heads. The type of sampling head selected determines the vertical input characteristics of the 7S12. The right-hand compartment (labeled PULSE GENERATOR) accepts S-series pulse generators, trigger recognizers or trigger count-down heads.

The 7S12 has the following features: The vertical deflection factors, i.e., millivolts/div and millirho/div, are from 2 to 500 in a 1-2-5 sequence. The time/div is calibrated from 20 ps/div to 1 μs/div in a 1-2-5 sequence. The DC OFFSET control offsets the display in a ±1 V range. The HI RESOLUTION switch reduces the waveform noise and jitter by signal averaging with a corresponding reduction of sweep rate. The LOCATE switch increases the time/div and intensifies a portion of the display to locate the time window relative to the total waveform. Front panel outputs include OFFSET OUT (±10 V range), VERTical SIGnal OUT and SWEEP OUT. Modes of sweep operation include SINGLE sweep, REPetitive sweep, MANual scan and EXTernal sweep IN.

The TIME-DISTANCE scale is calibrated for round-trip time measurements of 0 to 10 μs and one-way distance measurements up to 4900 feet (1500 meters) air dielectric or 3200 feet (975 meters) polyethylene dielectric. The POLY scale may be calibrated for transmission lines which have a velocity of propagation equal to or greater than that of polyethylene. The Time-Distance scale may be ordered with distance calibrated in metric units.

SECTION 1

ELECTRICAL CHARACTERISTICS

Characteristic	Performance Requirement	Supplemental Information
Deflection Factor		
Accuracy	Within 3%	
Range		2 units/div to 500 units/div in a 1-2-5 sequence. Units/div are labeled on the sampling head.
Units/Div VARIABLE Range		Provides continuous coverage from 1 to 770 units/div (mV or mρ)
ρ CAL Range		Allows calibrated reflection coefficient (ρ) with pulse generators supplying from 200 mV to 1 V pulse amplitude.
DC OFFSET Range	Offsets display at least +1 V to −1 V.	
OFFSET OUT		
Range		At least +10 V to −10 V. OFFSET OUT = 10X (DC OFFSET) within 2%
Source Resistance		10 kΩ within 1%

Characteristic	Performance Requirement	Supplemental Information
VERTical SIGnal OUT		
Amplitude		200 mV/div of signal display within 2% VARIABLE control must be in CAL position.
Source Resistance		10 kΩ within .5%
SWEEP OUT		
Amplitude		1 V/div of horizontal deflection within 2%
Range		0 V to greater than 10 V
Source Resistance		10 kΩ within 1%
TIME/DIV		
Accuracy	Within 3%	
Range		20 ps/div to 1 μs/div in a 1-2-5 sequence
Time/Div VARIABLE Range		Provides continuous coverage to at least 8 ps/div.
Display Modes		
SINGLE Sweep		Each sweep is initiated by pushing and releasing the START button.
REPetitive Sweep		Normal resolution: sweep rate is continuously variable from at least 1 sweep in 20 ms to less than 1 sweep in 5 s. HI RESOLUTION: sweep rate is continuously variable from at least 1 sweep in 200 ms to less than 1 sweep in 50 s.
MANual Sweep		Any portion of the display may be observed by manual operation of the SCAN control.
EXTernal Input		
Deflection Factor		1 V/div within 5% to at least 15 V/div
Input Resistance		100 kΩ within 10%
Maximum Input Voltage		150 V (DC + peak AC)
FINE (ZERO SET) Range		Moves an unmagnified waveform at least .9 div.

ELECTRICAL CHARACTERISTICS
SYSTEM PERFORMANCE WITH S-6 AND S-52

Characteristic	Performance Requirement	Supplemental Information
Risetime	35 ps or less for the incident step, 45 ps or less for the displayed reflection from a short-circuited 1 ns test line	
Pulse Amplitude	At least +200 mV into 50 Ω	
Input Impedance		Nominal 50 Ω
Jitter	Less than 10 ps (without signal averaging)	
Aberrations	Not more than +7%, −7%, total of 10% P-P within the first 1.8 ns of the step edge with the reference level at 1.8 ns from the step edge; not more than +2%, −2%, total of 4% P-P after 2.5 ns from the step edge with the reference level at 0.3 μs from the step edge.	
TIME-DISTANCE Scale		Time scale indicates round-trip time. Distance scales (AIR and POLY dielectrics) indicate one-way distance. The usable TIME-DISTANCE ranges for TDR measurements are limited by the S-52 pulse duration.
Accuracy	TIME scale within 1% of full scale.	Distance scales are calibrated for the nominal velocity of propagation of the AIR and POLY dielectrics.
TIME Range		TIME-DISTANCE Multiplier: X.1 — .1 μs; X1 — 1 μs; X10 — 10 μs. Maximum of about 150 ns one-way cable delay.
AIR Dielectric Distance Range		X.1 — 49 feet / 15 meters; X1 — 490 feet / 150 meters; X10 — 4900 feet / 1500 meters. Maximum of about 150 feet (46 meters) cable length.
POLY Dielectric Distance Range		X.1 — 32 feet / 9.75 meters; X1 — 320 feet / 97.5 meters; X10 — 3200 feet / 975 meters. Maximum of about 100 feet (30 meters) cable length.

Characteristic	Performance Requirement	Supplemental Information
PRESET		Permits the calibration of the POLY scale for dielectrics having a velocity of propagation between those of polyethylene and air.

ELECTRICAL CHARACTERISTICS
SYSTEM PERFORMANCE WITH S-5 AND S-54

Characteristic	Performance Requirement	Supplemental Information
Risetime	1.5 ns or less for the displayed reflection from a short-circuited test line	
Pulse Amplitude	At least +400 mV into 50 Ω	
Input Impedance		Nominal 50 Ω
Jitter	Less than 20 ps (without signal averaging)	
Aberrations	Not more than +4%, −6%, total of 10% P-P within the first 17 ns of the step: not more than +1.5%, −1.5%, total of 3% after 17 ns.	
TIME-DISTANCE Scale		Time scale indicates round-trip time. Distance scales (AIR and POLY dielectrics) indicate one-way distance. TDR events out to 20 μs (round-trip time) may be viewed. This corresponds to 9800 feet (3000 meters) in AIR dielectric and to 6400 feet (1950 meters) in POLY dielectric. This distance is the sum of the displayed time window (10 μs maximum) and the TIME scale readout (10 μs maximum).
Accuracy	TIME scale within 1% of full scale.	Distance scales are calibrated for the nominal velocity of propagation of the AIR and POLY dielectrics.
TIME Range		TIME-DISTANCE Multiplier

X.1	X1	X10
.1 μs	1 μs	10 μs

An additional time range may be viewed.

Characteristic	Performance Requirement	Supplemental Information		
AIR Dielectric Distance Range		49 feet	490 feet	4900 feet
		15 meters	150 meters	1500 meters
		An additional distance range may be viewed (in terms of time).		
POLY Dielectric Distance Range		32 feet	320 feet	3200 feet
		97.5 meters	9.75 meters	975 meters
		An additional distance range may be viewed (in terms of time).		
PRESET		Permits the calibration of the POLY scale for dielectrics having a velocity of propagation between those of polyethylene and air.		

PHYSICAL CHARACTERISTICS

Characteristic	Performance Requirement
Finish	Anodized aluminum front panel
Weight	
Net	4.7 lb
Domestic Shipping	7.2 lb
Export Packed	11.7 lb
Dimensions	
Length (excluding knobs)	13.383 in
Width	5.464 in
Height	4.988 in

ENVIRONMENTAL CHARACTERISTICS

Characteristic	Performance Requirement
Temperature	
Operating	0°C to +50°C
Non-operating	−40°C to +65°C

ENVIRONMENTAL CHARACTERISTICS (cont)

Characteristic	Performance Requirement
Altitude	
Operating	To 15,000 feet
Non-operating	To 50,000 feet
Vibration	
Operating	0.025 in P-P displacement at 55 Hz
Shock	
Operating	To 20 g's, 1/2 sine, 11 ms duration
Humidity	
Non-operating and Operating	5 cycles (120 hours) to 95% relative humidity referenced to MIL-E-16400F (Paragraph 4.5.9 through 4.5.9.5.1, Class 4)
Transportation	Qualifies under National Safe Transit Committee test procedure 1A, Category II

NOTES

SECTION 2
OPERATING INSTRUCTIONS

General Information

This section of the manual provides the basic information required for operation of the 7S12 TDR/Sampler including installation, front panel information, and First Time operation instructions.

The 7S12 is a combined horizontal and vertical, double width sampling unit for use in any 7000-series Oscilloscope. The 7S12 accepts two plug-in heads, a sampling head and a generator head, which determine the characteristics of the TDR system. If a trigger recognizer head such as the S-53 is used in the 7S12 generator head compartment, general purpose sampling can be accomplished using the S-53 to trigger the 7S12 sweep.

INSTALLATION

The 7S12 can be powered by any Tektronix 7000-series Oscilloscope. Since the 7S12 is a combined horizontal and vertical unit, it must be installed in the center two compartments of a 7000-series Oscilloscope containing 4 compartments, or into the right two compartments of a 7000-series Oscilloscope containing 3 compartments. A vertical unit such as a 7S11 can be installed in the left compartment of either Oscilloscope for dual-trace operation. Then J641 (a fixed shoe connector) provides a strobe connection to the 7S11.

Three methods of installation are shown in Fig. 2-1. Part A shows the 7S12 installed in the center two compartments of a 7504 Oscilloscope. The 7S11 and sampling heads are shown for TDR and dual-trace use. Part B shows the 7S12 installed with the 7S11, 7M11, and sampling heads for General Purpose Sampling and dual-trace use. Part C shows the 7S12 installed with the 7S11 and sampling heads in the 7403N (or 7503) 3-compartment Oscilloscope for TDR and dual-trace use. For General Purpose sampling, use the 7M11 outside the Oscilloscope, and the sampling heads as shown for installation B.

Installing the 7S12 in the Oscilloscope

Insert the 7S12 into a vertical and a horizontal compartment of a 7000-series Oscilloscope (See Fig. 2-1). Slide the 7S12 completely into the two compartments. The 7S12 will lock into place with a spring loaded latch knob.

To install a head into one of the two 7S12 compartments, insert the head into the compartment with the latch knob free to move until completely in the 7S12. Then push the latch to lock the head in place. To remove, pull the latch knob away from the panel, then pull the unit from the 7S12.

Mating

The 7S12 vertical output amplifier gain must be matched to the oscilloscope deflection factor for accurate gain measurements. The VERT GAIN control, a screwdriver adjustment on the front panel, adjusts the vertical output amplifier gain of the 7S12. Adjustment of this VERT GAIN control using the Oscilloscope Calibrator as a signal source is shown under First Time Operation in this section of the manual.

The 7S12 horizontal gain must be matched to the horizontal deflection factor of the oscilloscope. Horizontal gain is set by the SWEEP CAL adjustment located on the 7S12 front panel. The adjustment is made for full rotation of the SCAN control for 10 divisions with the MAN button pushed in. The HORIZ POS adjustment is used to position the spot on the CRT. The HORIZ POS control is also located on the front panel. The adjustment method is discussed in First Time Operation.

CONTROLS AND CONNECTORS

A brief description of the function and operation of the controls and connectors of the 7S12 follows. Fig. 2-2 shows the 7S12 front panel with a sampling head and a pulse generator installed.

Vertical Section

DC OFFSET ±1 V	Positions the display vertically by applying an internal offset voltage

Choice of Sampling Heads S-1 through S-6

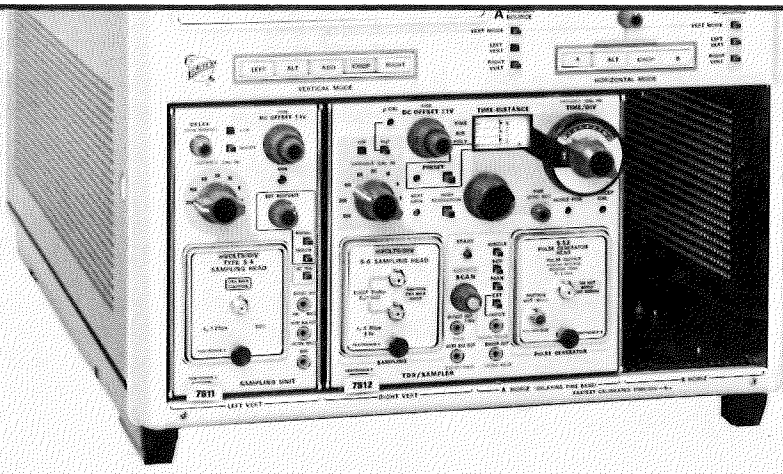

Pulse Generator Heads such as S-50, S-52, and S-54

(A) Installed in 7504 Oscilloscope for TDR and dual trace use.

Choice of Sampling Heads S-1 through S-6

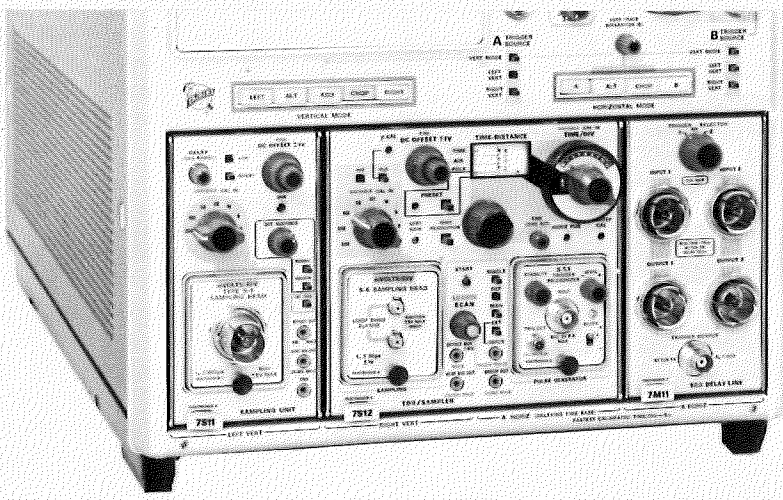

Trigger Recognizer Heads such as S-51 and S-53

(B) Installed in 7504 Oscilloscope for General Purpose sampling with 7M11 Delay Line and 7S11 for dual trace use.

Choice of Sampling Heads S-1 through S-6

Pulse Generator Heads such as S-50, S-52, and S-54

(C) Installed in 7503 (or 7403N) for TDR and dual trace use. For General Purpose Sampling, add the 7M11 (a passive unit) external to the Oscilloscope and use Heads as in (B).

Fig. 2-1. 7S12 Installation Information.

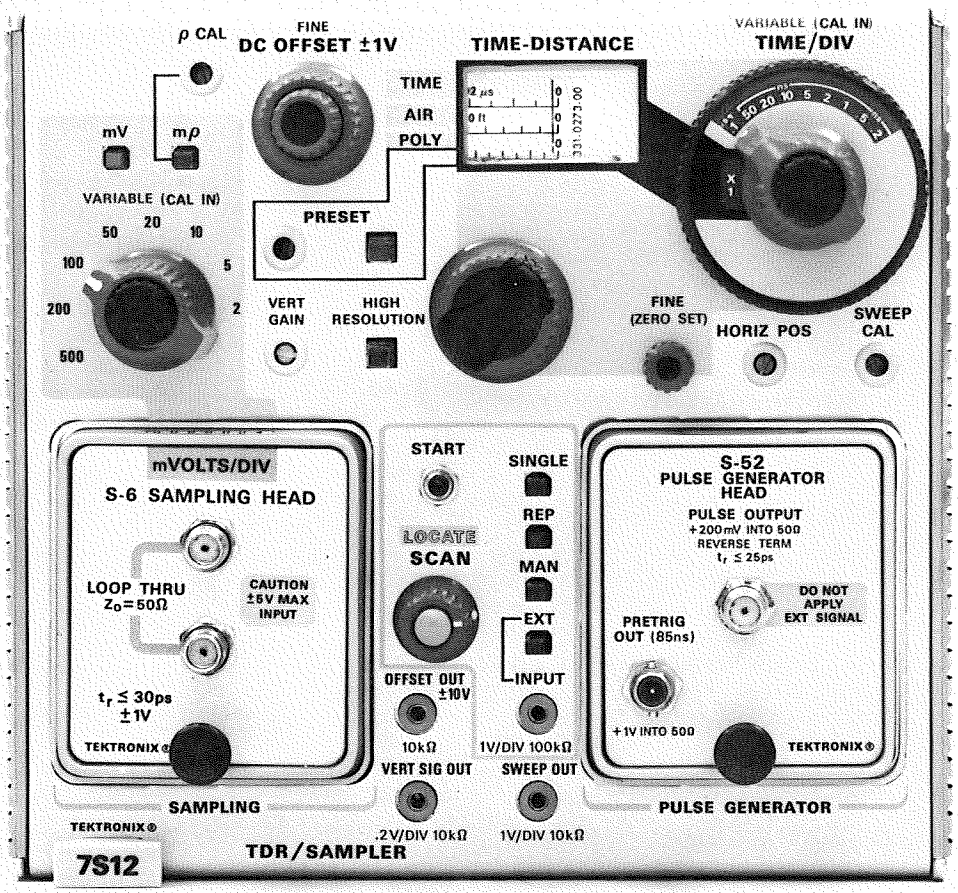

Fig. 2-2. 7S12 front panel.

of up to ±1 volt to the sampling head. The input signal zero reference (related to the CRT) is the DC offset voltage instead of ground. This control permits all portions of a ±1 volt input signal to be positioned through the CRT graticule area vertically even at a deflection factor of 2 units per division.

FINE

Provides fine control of the DC Offset function. Control is concentric with the DC OFFSET ±1 V control.

Units/Div

Selects calibrated deflection factors from 500 units/div to 2 units/div in a 1, 2, 5 sequence. The actual deflection factor is determined by the sampling head used and the "mV", "mρ" switch.

VARIABLE (CAL IN)

Provides uncalibrated, continuously variable deflection factor

from less than 0.65 to at least 2.5 times the calibrated setting. Concentric with the Units/Div switch.

mV and mρ pushbuttons — Permit selecting either mV/Div or mρ/Div as the basic unit of vertical measurement.

ρ CAL — Screwdriver adjustment permits calibrating the display for use with pulse amplitudes between 200 mV and 1 V.

HIGH RESOLUTION — Reduces the displayed noise by approximately 10 times and slows the display rate by 10 times.

VERT GAIN — Screwdriver adjustment permits calibration of the vertical output amplifier gain to match the oscilloscope CRT deflection factor.

OFFSET OUT ±10 V 10 kΩ — Miniature connector provides an output voltage proportional to the internal DC offset voltage. Unless otherwise specified on the sampling head front-panel, the open circuit voltage at this connector is ten times the internal DC Offset voltage as set by the DC OFFSET control. The output resistance is 10 kΩ.

VERT SIG OUT .2 V/DIV 10 kΩ — Miniature connector providing a real-time reproduction of the sampling display. Permits a non-sampling type oscilloscope to monitor the facsimile signal. Output resistance is 10 kΩ.

Horizontal Section

TIME/DISTANCE Control — Crank-handle drive positions the display over the full TIME/DISTANCE range selected by the Multiplier switch.

FINE Control — The FINE control provides a 10% position range with a 10 turn potentiometer for calibration of initial step.

LOCATE Switch — Provides a display of the location of the position control setting on a display equal to twice the normal position range. The width of a brightened portion approximates the TIME/DIV setting and starts at a point on the displayed sweep corresponding to the setting of the TIME/POSITION control.

PRESET Switch and Control — Provides a means of calibrating the POLY scale to accommodate the dielectric constants between Poly and air.

TIME/DIV Switch — A 9 position switch used in conjunction with the 3 position Multiplier switch. The 27 combinations of TIME/DIV and Multiplier switches provide 15 different calibrated TIME/DIV settings, from 20 ps/div to 1 μs/div, in a 1, 2, 5 sequence.

VARIABLE (CAL IN) Control — Provides continuously variable, uncalibrated time/div by reducing the time/division. Concentric with the Multiplier and TIME/DIV controls.

TIME/DISTANCE Multiplier — Provides a X10, X1, X.1 range multiplier for the TIME-DISTANCE tape dial. Switches Time/Distance ranges. Concentric with the TIME/DIV and VARIABLE (CAL IN) controls.

HORIZ POS Control — Screwdriver adjustment for setting the horizontal position of the display.

SWEEP CAL Control — Screwdriver adjustment that sets the horizontal gain to match the deflection factor of the oscilloscope.

SWEEP OUT Jack — Pin jack providing an output voltage proportional to the horizontal display amplitude. Provides 1 V for each division of display with an output resistance of 10 kΩ.

Variable SCAN Control — Provides an internal voltage for adjusting the scan rate in the REP mode and SINGLE mode. Provides the manual scan voltage in MAN mode and can be used to calibrate the horizontal gain. In the EXT mode this control serves as a variable attenuator.

REP Pushbutton — Provides repetitive scanning of the display. The scan rate is adjusted using the variable SCAN control.

SINGLE Pushbutton	Provides single scan display for photographic use. Scan rate is adjusted using the variable SCAN control.
START Pushbutton	Starts the single scan display after the SINGLE pushbutton is pushed.
MAN Pushbutton	Provides manual operation of the scan function using the variable SCAN control.
EXT INPUT Pushbutton	Allows scanning the display using an external signal. In this mode of operation, the variable SCAN control serves as a variable gain control.
EXT INPUT Jack	Pin jack provides the input facility for externally scanning the display. Requires 1 V for each division of display into an input resistance of 100 kΩ.
Correction Memory Switch	The three position switch is located near the top rear edge of the Horizontal card inside the 7S12. The Correction Memory circuit provides automatic base line correction for pulse generator heads and trigger heads.
On (front position)	This switch position is used when automatic base line correction is desired for trigger heads installed in the Pulse Generator compartment for DC stabilized sampler applications.
Normal (center position)	This is the normal operating switch position. The Correction Memory circuit provides automatic base line correction only for pulse generator heads installed in the Pulse Generator compartment.
Off (rear position)	This switch position disables the Correction Memory circuit. This position is also used when a sampling head gate balance control is being adjusted.

FIRST TIME OPERATION

General Information

This First Time Operation procedure shows the basic operation of the 7S12 controls for TDR operation using the S-52 Pulse Generator Head and the S-6 Sampling Head. Additional operating information follows the First Time Operation procedure.

Procedure

1. Insert the 7S12 TDR/Sampler into the center two compartments of the 7504 Oscilloscope. Any Tektronix 7000-series Oscilloscope may be substituted for the 7504. (See the installation information in this section.)

2. Install the S-52 in the 7S12 Pulse Generator compartment.

3. Install the S-6 in the 7S12 Sampling compartment.

4. Set the controls as follows:

7504 Indicator Oscilloscope

A Intensity	CCW
B Intensity	CCW
Vertical Mode	Right
Horizontal Mode	A

7S12 with S-6 and S-52
(Two center compartments, the right vertical and the A horizontal compartments)

TIME-DISTANCE dial	0
Multiplier	X10
TIME/DIV	1 μs
VARIABLE	CAL IN
FINE (ZERO SET)	Fully clockwise
REP	pushed in
SCAN	Midrange
LOCATE	pushed in
mV	pushed in
mV/Div	100
DC OFFSET (& FINE)	Midrange

5. Turn the Oscilloscope Power on. After about 5 minutes warmup time, advance the A Intensity until a free running trace is observed. Center the trace on the CRT with the 7S12 DC OFFSET control.

Adjust VERT GAIN

6. Install a SMA 1 ns coaxial cable (supplied with the S-52) with a 50 Ω termination connector to the S-6 Loop Thru (upper) connector. Install a SMA (3 mm) to BNC adapter on the Loop Thru (lower) connector. Use a BNC cable to connect the 0.4 V (into 50 Ω) Calibrator Output signal to the adapter installed on the S-6 Loop Thru (lower) connector.

7. Use a small screwdriver to adjust the VERT GAIN (on the 7S12 front panel) for a square wave display of 4 divisions. Note that the sweep is free running and its repetition rate is determined by the setting of the SCAN control. Remove the BNC cable and the BNC to SMA (3 mm) adapter.

Adjust SWEEP CAL & HORIZ POS

8. Push the MAN button and turn the SCAN control fully counterclockwise. A spot should be observed at the left edge of the graticule. If not, use a small screwdriver to adjust the HORIZ POS control (located on the 7S12 front panel) to position the spot at the left edge of the graticule. Rotate the SCAN control to its fully clockwise position. The spot should have moved exactly ten divisions to the right of its previous position. Use a small screwdriver to adjust the SWEEP CAL control (located on the 7S12 front panel) for ten divisions of movement when the SCAN control is turned from one extreme to the other. Readjust the HORIZ POS as necessary in this adjustment. Push the REP pushbutton and set the SCAN control to its approximate midposition.

9. Use 50 Ω semi-rigid cable (u-shaped, supplied with the 7S12) to connect the S-52 Pulse Output signal to the Loop Thru (lower) connector on the S-6. The upper Loop Thru connector is connected to a 1 ns semi-rigid coaxial cable in part 6.

NOTE

Connectors at both ends of the coaxial cable should be firmly connected to mating connectors or accessories. Tighten slightly more than finger tight using a 5/16 inch wrench. A good connection is necessary to minimize reflections at the junctions of connectors.

10. Observe the S-52 waveform shown in Fig. 2-3A. The positive pulse in the center of the screen is used in the S-52 to automatically reset the tunnel diode bias for the next pulser trigger from the 7S12. The S-52 output pulse is not visible on the screen due to the additional 7S12 trigger delay with X10 Multiplier.

Change the 7S12 Multiplier setting to X1 and observe the S-52 output pulse shown in Fig. 2-3B. The width of the pulse top will determine the maximum time (round trip time) of the reflection from the leading edge that can be observed with X1. Fig. 2-3C shows the leading edge of the pulse on the X.1 position of the Multiplier. Use the lowest Multiplier range setting to observe a reflection.

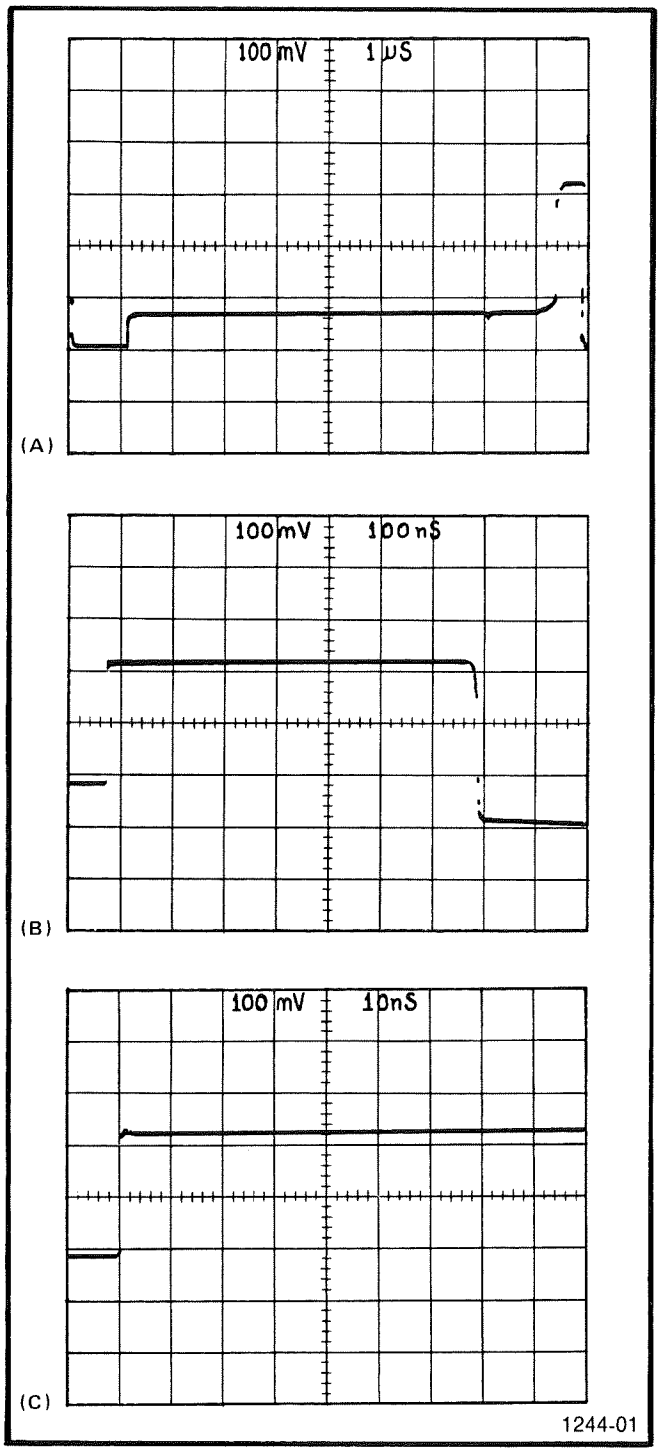

Fig. 2-3. First Time Operation showing Multiplier setting (A) X10, (B) X1 and (C) X.1.

Observing Risetime

11. To observe the leading edge of the S-52 Output Pulse, set the TIME-DISTANCE Multiplier to X.1, and the TIME/DIV to a sweep rate desired up to 20 ps; Use the Time-Distance knob to position the leading edge of the pulse to the center of the graticule. Use the 20 ps sweep rate for risetime display (Incident risetime) and use the mV/Div VARIABLE knob to set the leading edge for 5 divisions on the graticule. See Fig. 2-4. Note that the 5-division points on the display are about one T_r time from reference point 1 for 0% level and about one T_r time from reference point 2 for the 100% level.

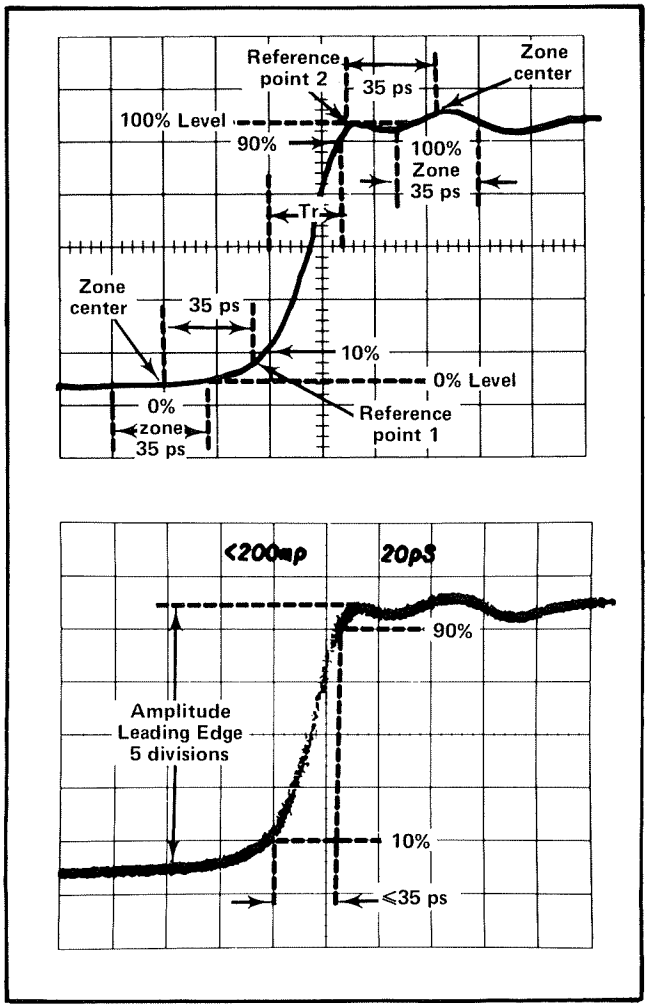

Fig. 2-4. Risetime measurement (T_r) information (upper) and typical risetime display (lower). Note that Reference point 1 and 2 are selected at the corners where the rate of change of the slope is maximum (where the radius of curvature is least).

12. To observe the reflected edge (Reflected risetime) of the S-52 Output Pulse, remove the 50 Ω termination from the end of the 1 ns semi-rigid coaxial cable connected to the S-6 Loop Thru (upper) connector, and connect a short-circuit termination to the cable.

Change the Time-Distance knob to move the Pulse leading edge to the left and off the CRT until the reflected edge display is centered on the CRT. See the typical waveform in Fig. 2-5. The Reflected risetime is measured in the same way as the Incident risetime.

FINE (ZERO SET)

Turn the FINE (ZERO SET) control and note that the control will change the horizontal position of the display. This control can be used as a fine position control, or can be used by the operator as a zero set for the TIME-DISTANCE dial. Since the reflected edge

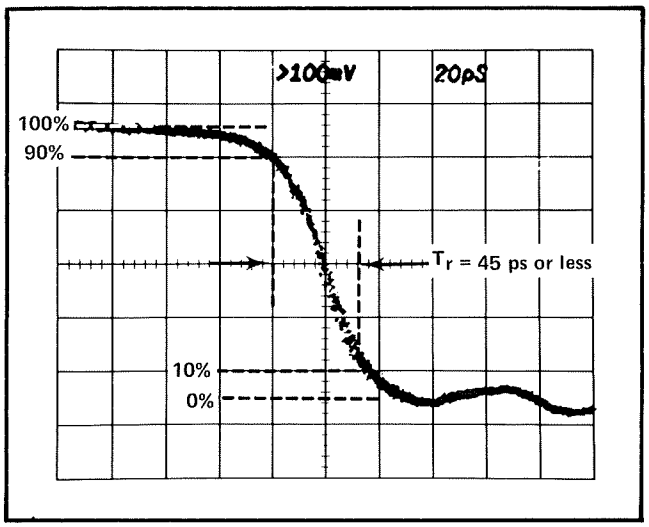

Fig. 2-5. Reflected risetime display.

represents the end of the 1 ns line where the test line will be attached, adjust the FINE control so the reflected edge of the pulse is displayed at the center of the screen (or a reference point selected by the operator) with the TIME-DISTANCE dial set to zero.

13. Change the TIME/DIV to .1, and change the Time-Distance knob to position the reflected pulse to the graticule centerline. See the typical waveform in Fig. 2-6A.

14. The negative reflection is caused from the short circuit termination. This reflection therefore has a voltage reflection coefficient of about -1ρ or -1000 mρ.

15. Remove the short circuit termination. Change the DC OFFSET control to position the display to show the positive reflection due to the open line. This reflection as shown in Fig. 2-6B has a voltage reflection coefficient of about $+1\ \rho$ or $+1000$ mρ.

CAL Adjustment

16. Terminate the 1 ns semi-rigid coaxial line with a 50 Ω termination. Change the TIME/DIV to .2 ns, and change the Time-Distance knob to position the leading edge of the pulse to the center of the graticule. Push the mρ button in, and set the mρ/Div to 200.

17. With a small screwdriver, adjust the ρ CAL control for a 5 division displayed step amplitude.

Voltage Reflection Coefficient

As shown in Fig. 2-6, the reflection coefficient ρ (rho) is taken from the top of the incident pulse from

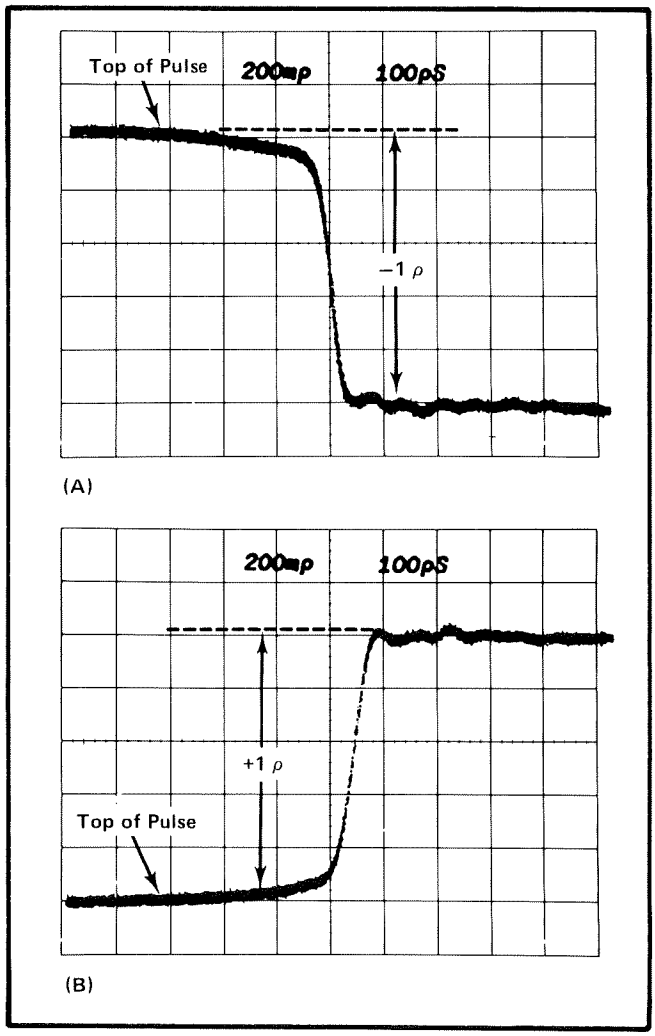

Fig. 2-6. Display of a short circuit terminated line (A) and unterminated line (B).

the pulse generator. A positive reflection (referenced from the top of the incident pulse) indicates an impedance greater than the impedance of the line. A negative reflection indicates an impedance less than the impedance of the line. With a known ρ, resulting from a resistive load, the resistance of the load can be found by the following formula:

$$R_L = Z_o \left(\frac{1 + \rho}{1 - \rho}\right)$$

Impedance Scale Overlays

For each mρ amplitude discontinuity displayed on the CRT, the indicated impedance R_L can be calculated by the above formula. Impedance Scale Overlays are available for the CRT face showing direct reading of the Impedance at each graticule setting for 6 different mρ/Div settings. Three overlays are required to cover 5, 10, 20, 50, 100 and 200 mρ/Div settings. Two sizes of three overlays each are included in the 7S12 accessories.

To use the Impedance Scale Overlays, select the overlay for the mρ/Div setting you are using, and install it in position over the graticule on the Oscilloscope; read the impedance values under the proper mρ/Div scale listing for the amplitude of the reflection. Note that the graticule center is used as the 50 Ω reference line.

In addition to impedance values, the overlays include a POLY distance scale in cm using the 100 ps/Div time. For further information, read the Time or Distance Measurement Procedures later in this section.

TIME OR DISTANCE MEASUREMENTS

General Information

The TIME-DISTANCE dial setting can be considered to be a delay in time before the operation of the display time (except in LOCATE). The display time has 3 multipliers or ranges, which also multiply the TIME-DISTANCE dial reading. The display time includes a TIME/DIV (magnification of 1 to 500 times), and a TIME/DIV VARIABLE control which provides a variable uncalibrated time by reducing the time per division.

When the LOCATE button is depressed to release (out position), the displayed time is twice the time (magnification of 0.5) labeled at the CCW position of the TIME/DIV switch. Then the TIME/DIV switch controls the length of the bright portion of the display to show the position on the display relative to the pulse edge. The Oscilloscope readout of the Time/Div will show the correct reading when the LOCATE button is depressed (in position).

Time/Div

Fig. 2-7 shows the TIME/DIV settings for the Multiplier settings. The Multiplier changes the scale factor of the TIME-DISTANCE dial readings. The TIME-DISTANCE dial readings are not generally used when in LOCATE. The LOCATE position display is intensified by the Display Window time as controlled by the TIME/DIV and the TIME/DIV VARAIBLE controls. The Display Window time becomes the normal display time when the LOCATE button is depressed.

Fig. 2-8 shows the Display Window time for two settings of the TIME/DIV control and three settings of the TIME-DISTANCE dial.

With the TIME/DIV setting CCW (.1 μs/Div), shown in Fig. 2-8A, the TIME-DISTANCE dial is set for a Multiplier of X1. Note that a delay from zero time to 1 μs dial setting, with the additional time of the Display window results in a total of 2 μs from the zero time. Accordingly, the duration of the Pulse Output from the Pulse Generator head must be at least 2 μs. Use of the Multiplier of X1 with the S-52 is

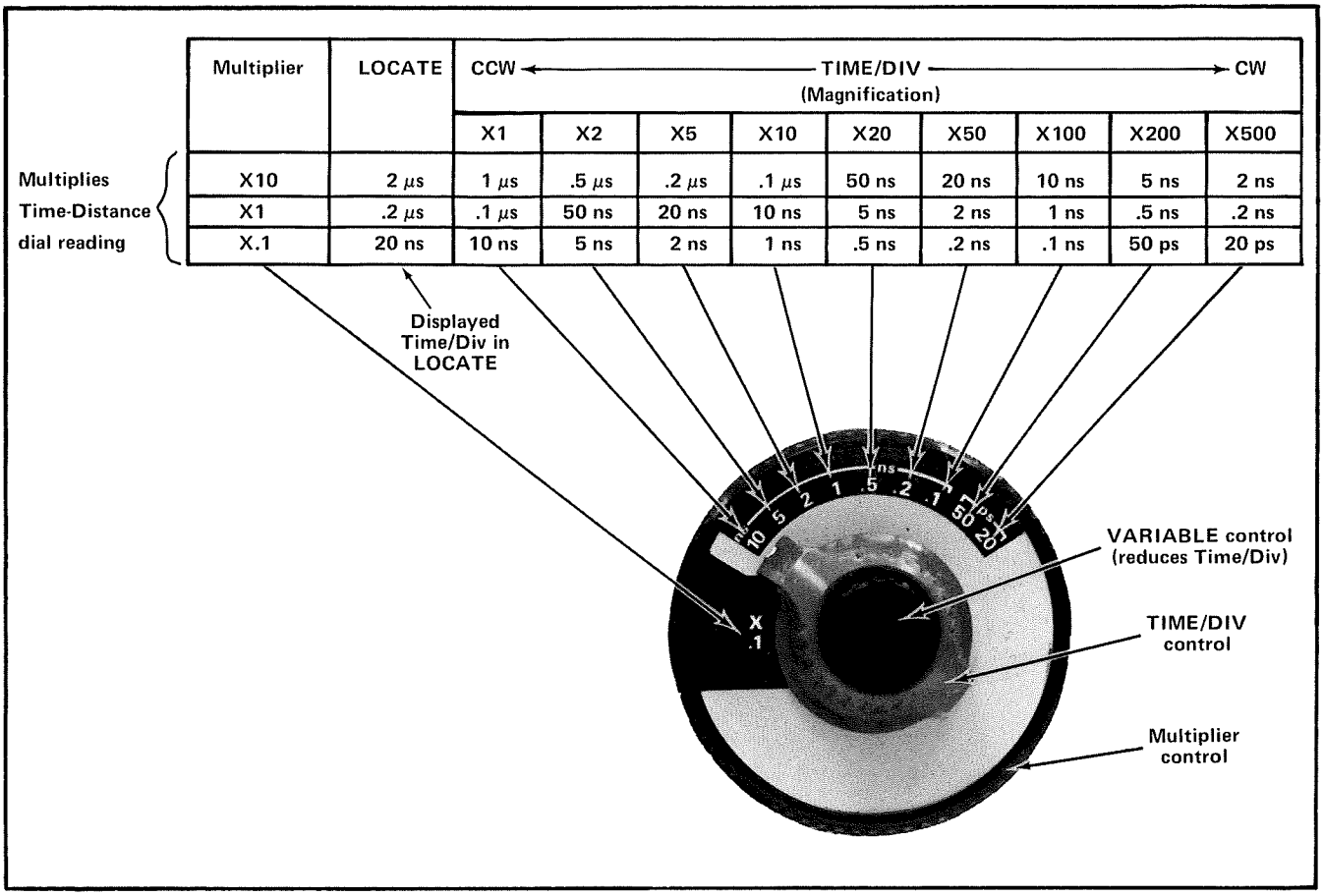
Multiplier
LOCATE
CCW
TIME/DIV
(Magnification)
CW
X1
X2
X5
X10
X20
X50
X100
X200
X500
Multiplies Time-Distance dial reading
X10 2 μs 1 μs .5 μs .2 μs .1 μs 50 ns 20 ns 10 ns 5 ns 2 ns
X1 .2 μs .1 μs 50 ns 20 ns 10 ns 5 ns 2 ns 1 ns .5 ns .2 ns
X.1 20 ns 10 ns 5 ns 2 ns 1 ns .5 ns .2 ns .1 ns 50 ps 20 ps
Displayed Time/Div in LOCATE
VARIABLE control (reduces Time/Div)
TIME/DIV control
Multiplier control
X .1

Fig. 2-7. Time/Div control information.

limited due to the short duration S-52 output pulse, shown in Fig. 2-3B. Also, use of the X10 Multiplier is restricted due to the 7S12 pulser trigger delay and the S-52 short pulse. Using the Multiplier of X10 with a pulse generator head with a long pulse duration (for example S-54 with a pulse duration of 25 μs) the total time of about 20 μs is available.

As the TIME/DIV is changed toward the CW positions, the Display Window time is less and the total time from zero is less, as shown in Fig. 2-8B.

Time or Distance Measurement Procedures

Procedures for Time or Distance measurements can be shown in three general methods:

(A) On the screen, where measurement points are located a short distance apart.

(B) Between two points on the TIME-DISTANCE dial.

(C) From dial zero, on the TIME-DISTANCE dial.

(A) On the Screen. The distance between two measurement points or discontinuities on the screen may be determined more readily than from the TIME-DISTANCE dial. Measure the time separation on the CRT screen, note the horizontal calibration (TIME/DIV) and use Table 2-1 to determine the distance separation. This table is an aid in making measurements for short distances, where the TIME-DISTANCE dial's resolution is limited. The column "Separ-

TABLE 2-1

On Screen Time vs. Distance (Separation)

Time is for round trip, and Distance is for one way, in inches or cm/div.

TIME/DIV	Separation in AIR	Separation in POLY	Separation in PRESET (Spans AIR to POLY)
20 ps/Div	.12 inch/Div .3 cm/Div	.08 inch/Div .2 cm/Div	
50 ps/Div	.3 inch/Div .75 cm/Div	.2 inch/Div .5 cm/Div	
100 ps/Div	.6 inch/Div 1.5 cm/Div	.4 inch/Div 1 cm/Div	

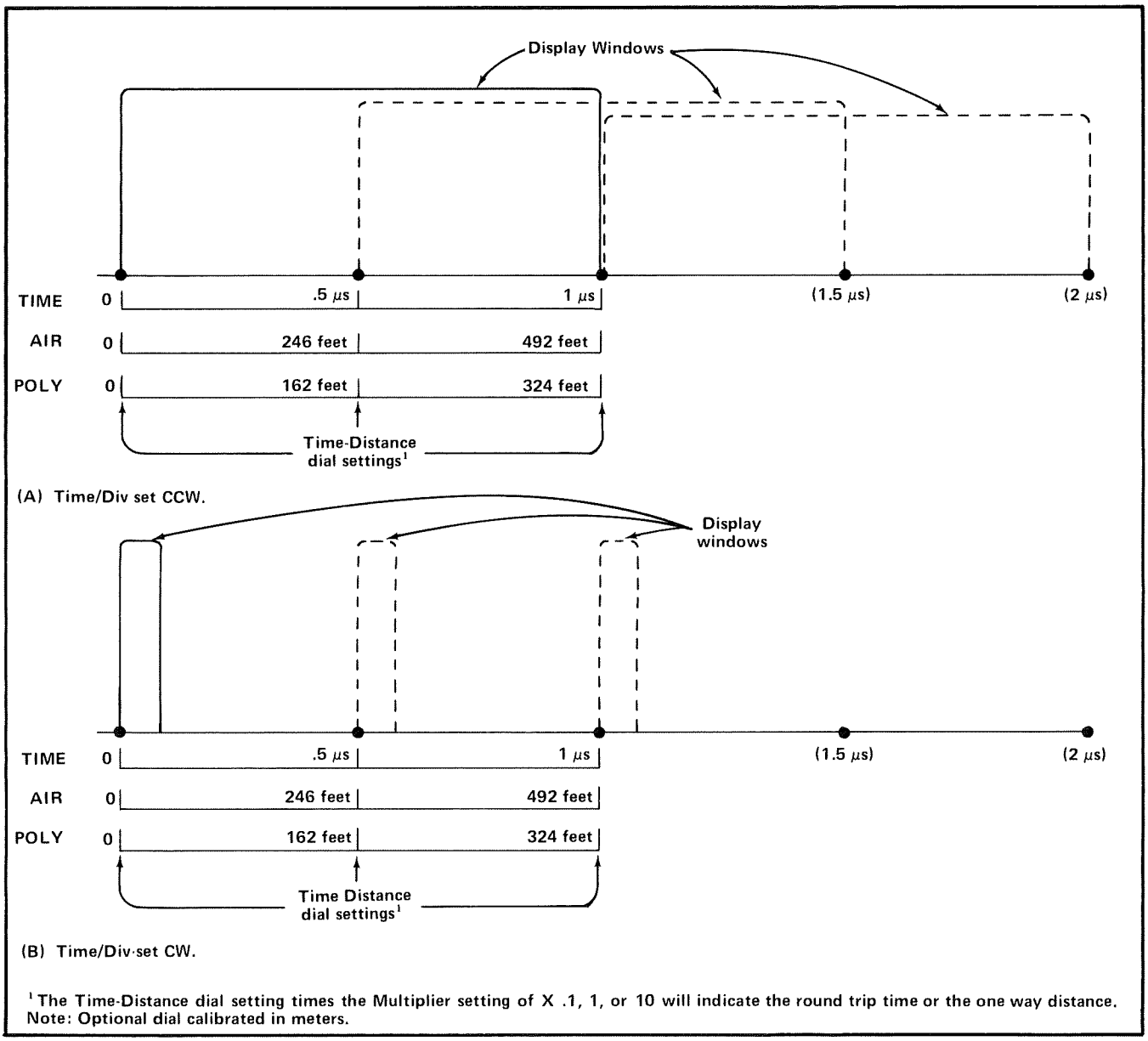

Fig. 2-8. Effect of the Time/Div setting in relation to the three settings of Time-Distance dial. The time or distance represented in the time windows shown is determined by the Multiplier setting.

ation in PRESET (Spans AIR to POLY)" can be filled in or noted by the operator. The PRESET distances will be determined by the setting of the PRESET control (a screwdriver adjustment on the front panel) when the PRESET button is pushed in. The adjustment is set by the operator for cable propagation velocities between air and Poly.

(B) Two dial points. This method uses the net dial reading to determine the distance between the two points or discontinuities. Observe one of the two discontinuities and note its reference point on the screen (or set the FINE control to position the discontinuity to the center or reference point on the CRT). Record the Time-Distance dial setting (TIME, POLY, or PRESET POLY). Change the Time-Distance knob to position the other discontinuity to the same reference point on the CRT. Record the TIME-DISTANCE setting. Subtract one recorded reading from the other, to determine the net dial reading. The net dial reading, times the Multiplier setting, will result in the round trip time or one way distance between the two discontinuities.

(C) From dial zero. In order to make measurements directly from the TIME-DISTANCE dial, the zero point must be determined. The FINE (ZERO SET) control is useful for a fine positioning control, and to set the dial zero.

For example, use the S-52 and S-6 with a Multiplier setting of X.1. Set the TIME-DISTANCE dial to 0, the TIME/DIV to 2 ns, and the FINE control fully clockwise. Use the open or short circuit termination at the end of the 1 ns line connected at the S-6 Loop Thru (upper) connector, to display the zero point or reference on the CRT. Then, use the FINE control to position this reference point to the left side of the graticule. Check other TIME/DIV settings especially at 20 ps/Div. The TIME-DISTANCE dial reading time 0.1 will then be the round trip time or one way distance from the reference point. The same procedure applies with the X1 Multiplier (limited by the S-52 Output pulse duration). When using the S-54 Pulse Generator head, the risetime is less; however, the same procedure applies, but on all Multiplier settings.

NOTE

The 1 ns semi-rigid coaxial line (Tektronix Part No. 015-1023-00) should be used when making time or distance measurements because S-6 and S-52 waveform discontinuities are in the first 2.0 ns. The junction of the transmission line and the sampling head connector is found by partially disconnecting the line under test from the sampling head connector to produce an inductive discontinuity (see Fig. 2-9) at the junction. Adjust the FINE control to place the discontinuity, a bump, at a convenient reference point for the measurement and then fully reconnect the transmission line.

High Resolution

Smoothing is always switched into the circuit in the 5 and 2 positions of the units/Div switch. High resolution, a separate pushbutton switch on the front panel, can be selected whenever smoothing of the display is required. The displayed noise is reduced by about 10 times, and the scan rate is reduced about 10 times. A further reduction in the scan rate may be necessary (by changing the SCAN control) to avoid oversmoothing the display.

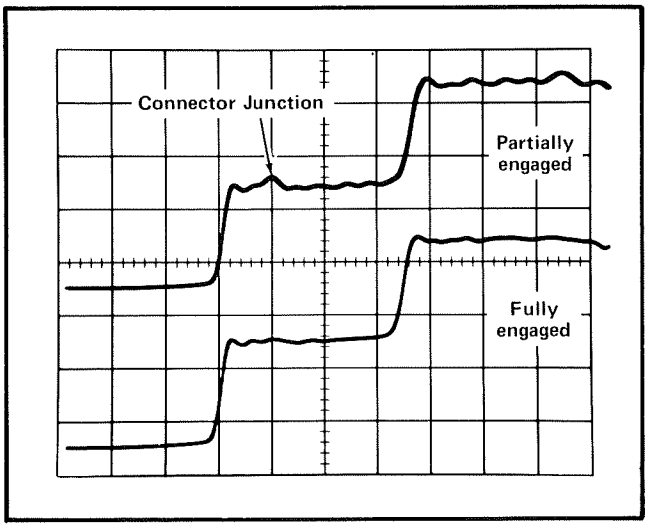

Fig. 2-9. TEST LINE connector junction location obtained by partially engaging the line to the connector.

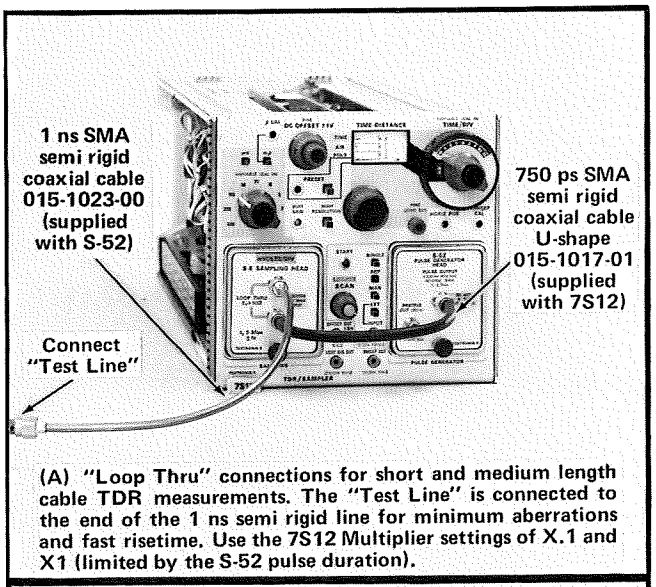
1 ns SMA semi rigid coaxial cable 015-1023-00 (supplied with S-52)
750 ps SMA semi rigid coaxial cable U-shape 015-1017-01 (supplied with 7S12)
Connect "Test Line"

(A) "Loop Thru" connections for short and medium length cable TDR measurements. The "Test Line" is connected to the end of the 1 ns semi rigid line for minimum aberrations and fast risetime. Use the 7S12 Multiplier settings of X.1 and X1 (limited by the S-52 pulse duration).

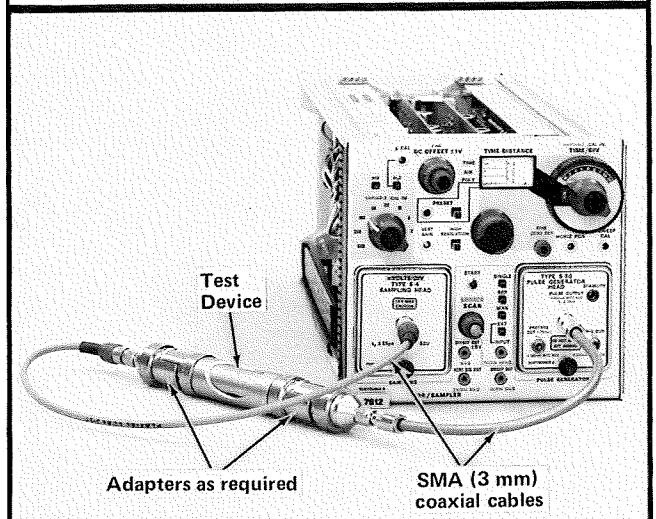

(B) "In Line" connections for short length cable TDR measurements. The transmission system under test must have two ports with low attenuation between them. SMA (3 mm) semi rigid cables are used with the proper adapter to the device under test. Use the 7S12 Multiplier setting of X.1.

Fig. 2-10. Application connections for "Loop Thru", and "In Line" TDR.

Single Sweep Operation

The SINGLE and START front panel controls are used in the single sweep operation for recorders.

Before recording, set the controls for the desired display in the normal repetitive mode. Set the desired scan rate for the recorder. Connect the recorder to the 7S12, using the VERT SIG OUT and the SWEEP OUT as required by the recorder.

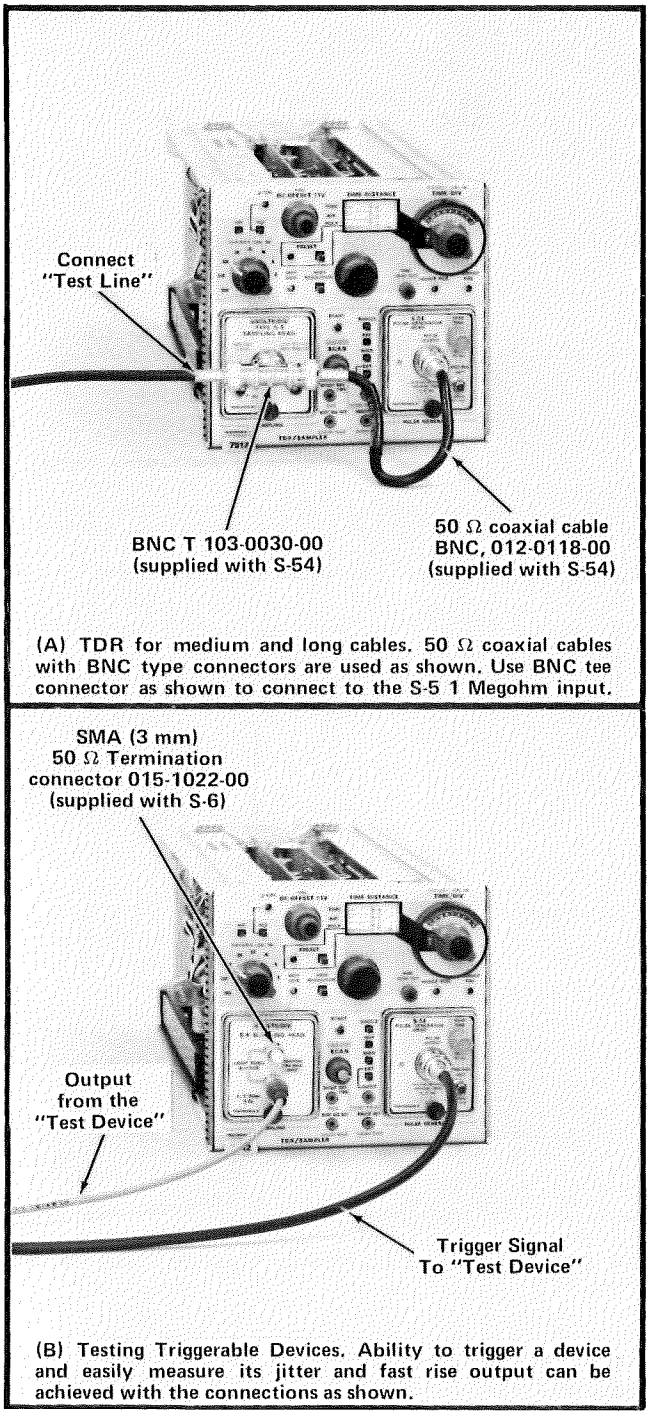

(A) TDR for medium and long cables. 50 Ω coaxial cables with BNC type connectors are used as shown. Use BNC tee connector as shown to connect to the S-5 1 Megohm input.

(B) Testing Triggerable Devices. Ability to trigger a device and easily measure its jitter and fast rise output can be achieved with the connections as shown.

Fig. 2-11. Application connections (A) for TDR of medium and long cables and (B) for testing triggerable devices.

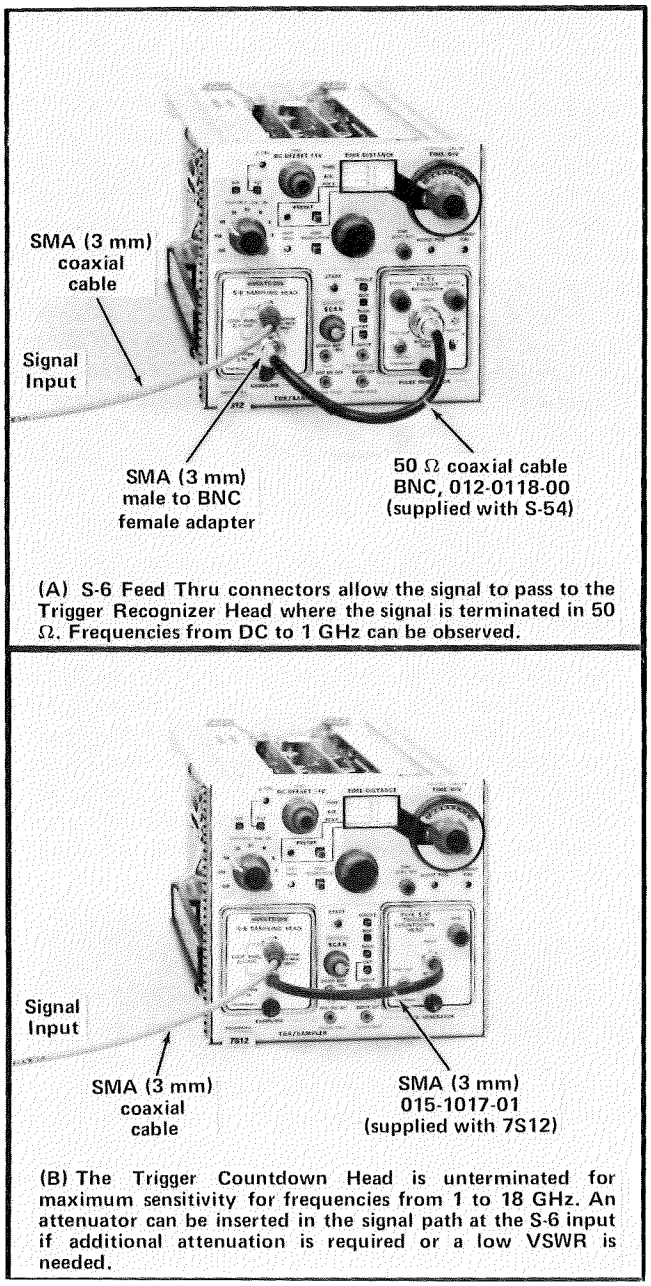

(A) S-6 Feed Thru connectors allow the signal to pass to the Trigger Recognizer Head where the signal is terminated in 50 Ω. Frequencies from DC to 1 GHz can be observed.

(B) The Trigger Countdown Head is unterminated for maximum sensitivity for frequencies from 1 to 18 GHz. An attenuator can be inserted in the signal path at the S-6 input if additional attenuation is required or a low VSWR is needed.

Fig. 2-12. High Frequency Signal Application.

When single sweep recording is desired either with a camera or with another type recorder, push the SINGLE button. The CRT spot will move off to the right of the screen. Push the START button and hold it depressed, which will move the spot to the left side of the screen ready for single sweep, and the blanking will be turned on. During this time, activate the recorder controls as necessary, or open the camera shutter. Then release the START button, and the sweep will progress across the screen and stop on the right side, ready for another operation.

PRESET Calibration

The Poly scale must be recalibrated for cables having a velocity of propagation greater than that of polyethylene, which is 0.659 times the speed of light in free space.

The following procedure recalibrates the Poly scale when the PRESET switch is pushed in.

1. Push in the PRESET switch.

2. Place the UNITS/DIV switch to 500.

3. Install a KNOWN length of the type of unterminated cable that is to be measured on the end of the 1 ns semi-rigid coaxial line.

4. Place the TIME-DISTANCE scale at zero.

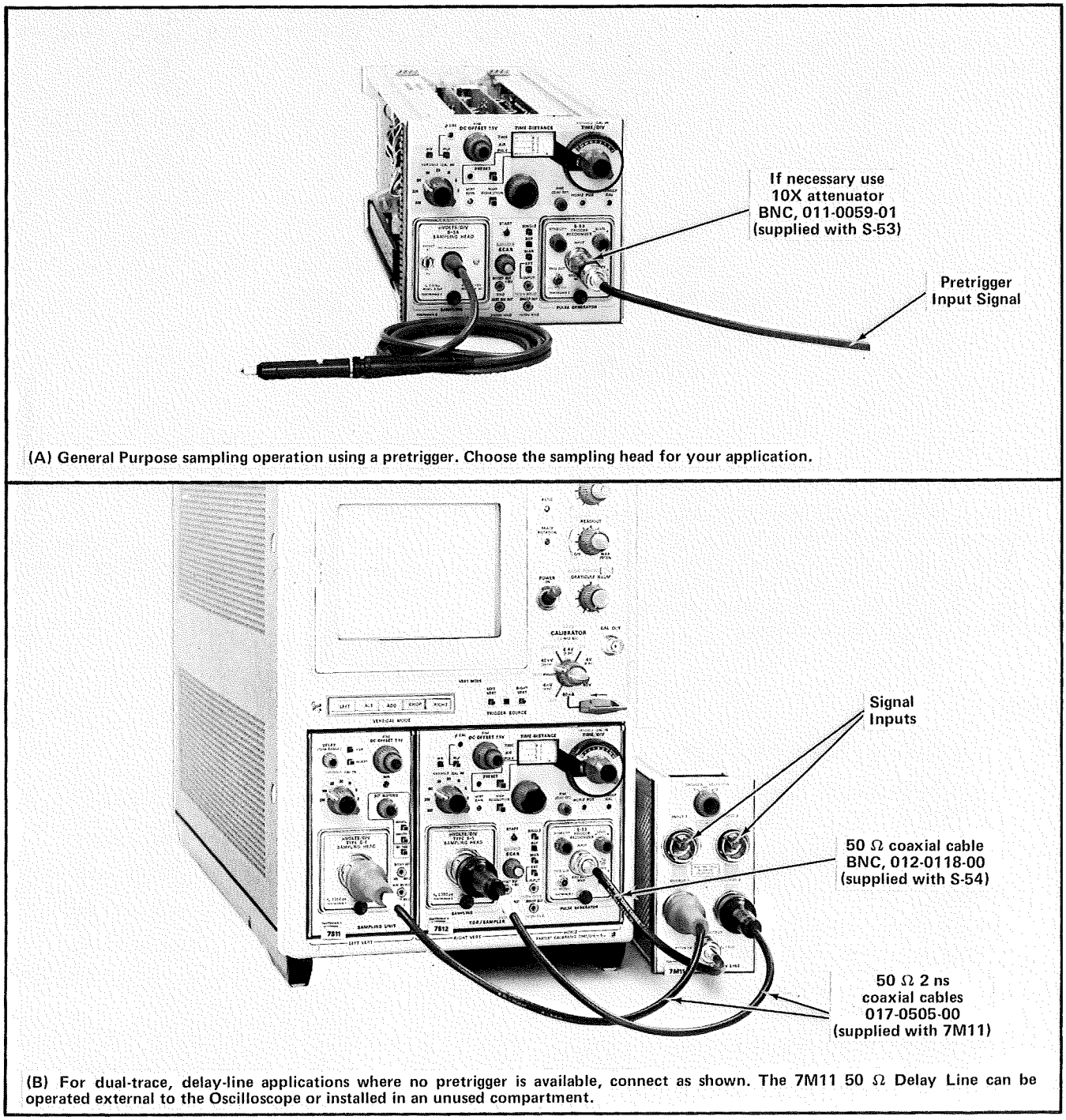

(A) General Purpose sampling operation using a pretrigger. Choose the sampling head for your application.

(B) For dual-trace, delay-line applications where no pretrigger is available, connect as shown. The 7M11 50 Ω Delay Line can be operated external to the Oscilloscope or installed in an unused compartment.

Fig. 2-13. General Purpose sampling.

5. Produce an inductive discontinuity at the cable connector by partially disengaging the cable connector from the 1 ns coaxial line connector. Adjust the FINE control to position the discontinuity (a bump on the displayed waveform) at a convenient reference line and then fully engate the connector. See Fig. 2-9 which illustrates this discontinuity.

6. Place the TIME-DISTANCE scale at the KNOWN length readout of the POLY-PRESET scale.

7. Adjust the PRESET calibration control, at the left of the PRESET switch, so that the reflected pulse is positioned at the reference graticule line.

APPLICATION CONNECTIONS

Figures 2-10 through 2-13 show some general applications for the 7S12 and other instruments. Normal interconnections are shown with the accessories supplied with the instruments. Where dual-trace is required, a plug-in unit such as a 7S11 with an appropriate sampling head can be used, installed in the left vertical compartment of the 7000-series Oscilloscope next to the 7S12. Choice of Heads for the 7S12 Sampling and Pulse Generator compartments provides further flexibility of the general applications shown.

PULSE ECHO TESTING OF ELECTRICAL TRANSMISSION LINES
USING THE TEKTRONIX ® TIME DOMAIN REFLECTOMETRY SLIDE RULE

Introduction

Most people who make quantitative reflectometry tests or measurements should find the TEKTRONIX TDR Slide Rule helpful. Those new to the subject will find the slide rule graphically summarizes a wealth of information on reflectometry. The illustrations, notes and instructions here should serve to clarify that information.

Section

1. VSWR versus Percent Reflected Voltage.
2. Return Loss, dB, versus Percent Reflected Voltage.
3. Percent Reflected Voltage or *p* versus Characteristic Line Impedance, Z_0, for either 50 or 75 Ω source.
4. Percent Reflected Voltage or *p* versus Load Resistance, R_L, for either 50 or 75 Ω source.
5. Z_0 or R_L versus Reflection Amplitude as seen on your Reflectometer.
6. Centimeters versus Inches, or Meters versus Feet.
7. Dielectric Constant versus Velocity Factor.
8. Time versus Short Distances, in Centimeters or Inches, any dielectric.
9. Time versus Long Distances, in Meters or Feet, any dielectric.
10. Distance versus Time seen on your Oscilloscope for cables with AIR, FOAM, TFE, or POLYethylene dielectrics.

TERMS AND SYMBOLS

R_s	is Source Resistance, of a signal generator.
Z_s	is Source Impedance, of a signal generator.
Z_0	is Characteristic Impedance, of a transmission line.
Z_L	is Load Impedance, for a transmission line.
R_L	is Load Resistance, for a transmission line.
p	is Reflection Coefficient (rho), the ratio of incident to reflected voltage.
m*p*	is Reflection Coefficient divided by 1000 (milli-rho).
%	is Ratio of incident to reflected voltage times 100.
VSWR	is Voltage Standing Wave Ratio (Peak-to-Valley ratio).

c is Velocity of light in air.

V_p is Propagation Velocity of a signal in a transmission line.

V_F is Velocity Factor (fraction of velocity of light).

k is Dielectric Constant.

D is the outer diameter of the dielectric in a coaxial cable.

d is the diameter of the center conductor in a coaxial cable.

L is inductance in nanohenries per foot.

C is capacitance in picofarads per foot.

RELATIONSHIPS

Z_0 $= (138/\sqrt{k}) \times (\log_{10} D/d)$ for a coaxial cable.

% $= p \times 100$.

VSWR $= (1 + p) \div (1 - p)$ for the case where VSWR is the same for all frequencies.

c = 30 cm per nanosecond = .984 feet per nanosecond.

V_F $= 1/\sqrt{k}$.

V_p $= 30/\sqrt{k}$ centimeters per nanosecond $= .984/\sqrt{k}$ feet per nanosecond.

C $= 7.36\ k \div (\log_{10} D/d)$.

L $= 140 \log_{10} D/d)$.

1 inch = 2.54 cm.

1 foot = 30.48 cm.

1 meter = 3.28 feet.

1. VSWR versus Percent Reflected Voltage

To find the Voltage Standing Wave Ratio, VSWR, knowing the percent reflected voltage (or vice versa) use the Frequency Domain Conversions section on the back of the slide rule. On the upper scale in that section locate the known value of VSWR or %. Adjacent to that point is the corresponding value for % or VSWR. VSWR is the peak-to-valley ratio of standing sinewaves. Note that this relationship between % and VSWR holds only when caused by only one impedance discontinuity that has negligible capacitive or inductive components—for example, a 75-ohm termination at the end of a 50-ohm cable. Another way to express the same caution is to say the VSWR must be essentially the same for all sinewave frequencies for the relationship to be valid.

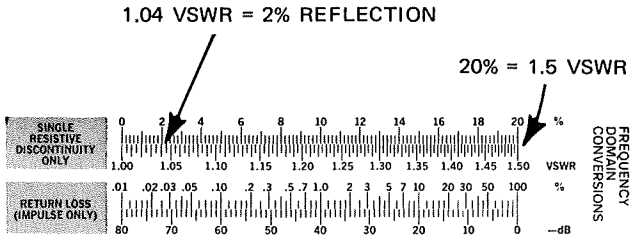

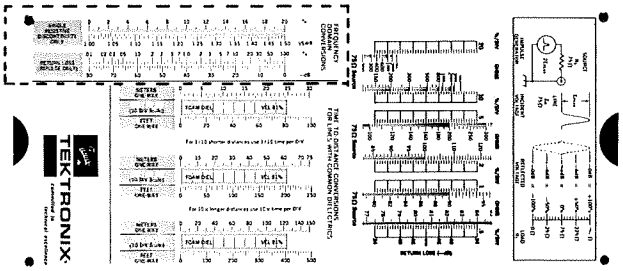

2. Return Loss, dB, versus Percent Reflected Voltage

To find return loss in decibels knowing the percent reflected voltage (or vice versa) use the bottom scale in the Frequency Domain Conversions section of the slide rule. Locate the known value of percent reflected voltage or the known dB return loss and next to that will be the value of the corresponding expression on the adjacent scale. Note that only the impulse mode of Time Domain Reflectometry may always be suitably expressed in terms of return loss. Also keep in mind that a narrow impulse will be attenuated by losses in the cable and reflections will be attenuated likewise.

As with measurements of VSWR there is only a simple mathematical relationship between reflection measurements using sinewaves and reflection measurements using pulses when one resistive discontinuity is the whole cause for the sizeable reflections.

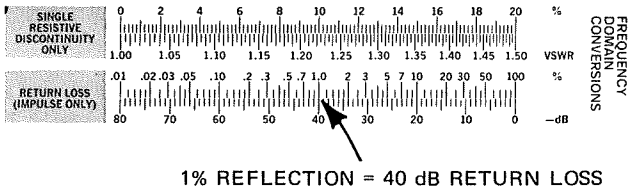

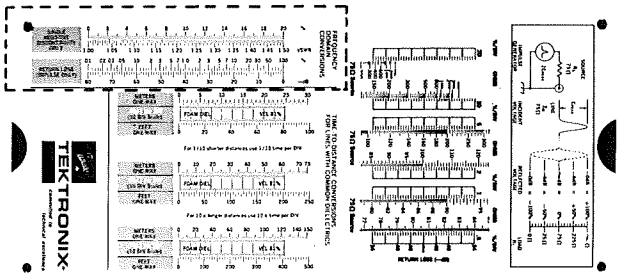

3. Percent Reflected Voltage or p versus characteristic Line Impedance, Z_0, for either 50 or 75 Ω Source

To find the characteristic impedance of a line or section of a line knowing the reflection coefficient, *p*, or the percent reflected voltage, you should first know the impedance of the pulse generator. It should be as close as possible to the nominal impedance of the line and be connected to the line through a length of cable having the same impedance as the source. Select the side of the slide rule that corresponds to the source resistance (R_s) of the generator used then select the longest scale this way:

Size of Reflection	Use	Scale

100% to 80% (1*p* to .8*p*) — 20%/DIV (.2*p*/DIV)
80% to 40% (.8*p* to .4*p*) — 10%/DIV (.1*p*/DIV)
40% to 16% (.4*p* to .16*p*) — 5%/DIV (.05*p*/DIV)
16% to 8% (.16*p* to .08*p*) — 2%/DIV (.02*p*/DIV)
8% to 4% (.08*p* to .04*p*) — 1%/DIV (.01*p*/DIV)
4% or less (<.04*p*) — .5%/DIV (.005*p*/DIV)

If the reflection is downward from the 50-ohm (or 75-ohm) reference level, set the reference level to the top of the chosen scale. If the reflection is toward a higher impedance than the reference level, set the reference level to the bottom of the chosen scale. Then count off the right number of divisions and sub-divisions to locate the level corresponding to the peak of the reflection and read the corresponding impedance level (ohms) on the adjacent sliding scale.

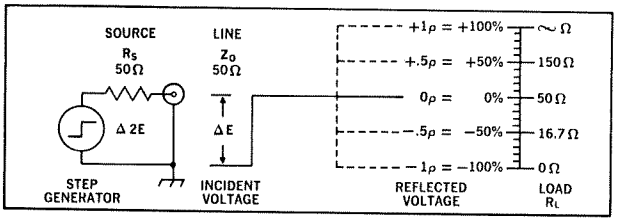

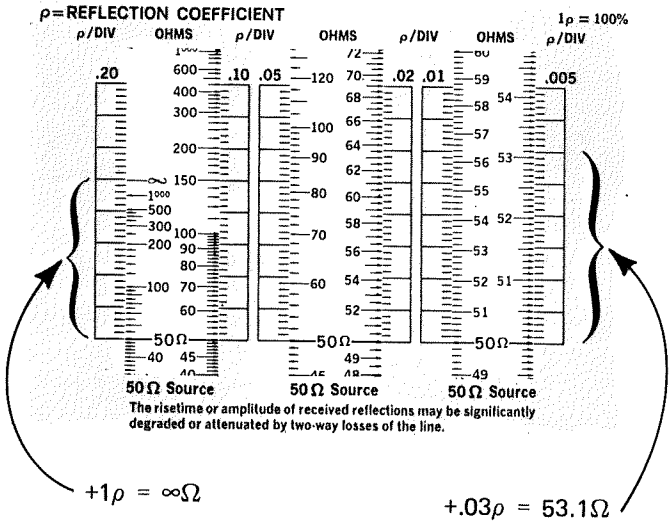

To find the size reflection to expect knowing the line impedance and the source resistance, first select the side of the slide rule having the right source resistance. For cables having a higher impedance than the selected source resistance, put the sliding reference level even with the bottom stationary scale markings. For cables having a lower impedance than the selected source resistance, move the reference level even with the top of the scale markings. For best accuracy select the scale farthest to your right in which the impedance level (ohms) of interest is within view. Read from the adjacent stationary scale the Reflection Coefficient or Percent Reflected Voltage that corresponds to the ohms selected.

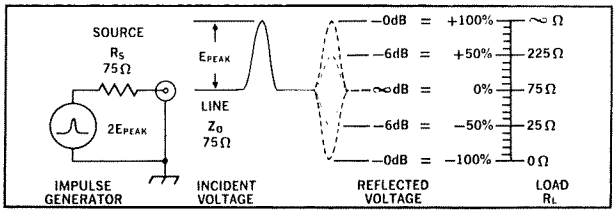

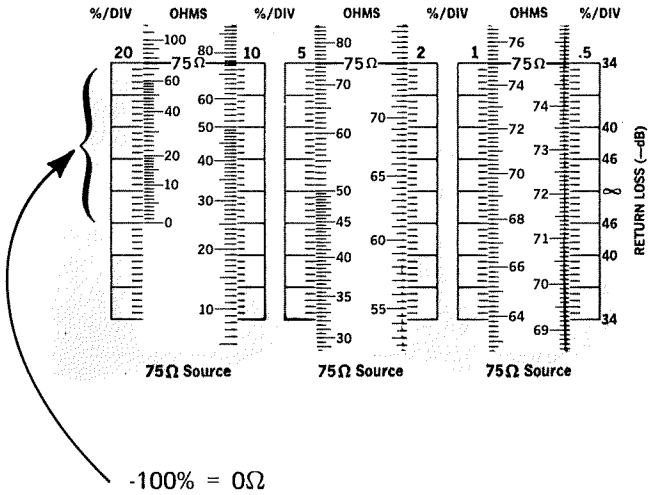

4. Percent Reflected Voltage or p versus Load Resistance, R_L, for either 50 or 75 Ω Source.

To find the terminating load resistance (R_L) of a line knowing the percent reflected voltage or reflection coefficient use preceeding instruction number 3. Also use instruction 3 to find the size reflection to expect knowing the load resistance. An error may be introduced if the impedance of the connecting cable doesn't match the source resistance of the pulse generator.

5. Z_0 or R_L versus Reflection Amplitude as seen on your Reflectometer.

Line Impedance (Z_0) or Load Resistance (R_L) may be derived directly from the amplitude of a reflection displayed on a Time Domain Reflectometer Cathode-Ray Tube or Chart. The displayed reflection should first be positioned vertically to a known 50-ohm (or 75-ohm) reference level. For a reference level, use either a section of line of known impedance ahead of the line or load under test, or use a termination of known resistance at the end of the line. The slide rule may then be used by selecting the side with the same souce resistance and the same scale as the reflectometer and positioning the 50-ohm (or 75-ohm) reference level on the sliding scale to a line on the stationary scale corresponding to the one selected for the reference level in the display. The impedance (ohms) causing the reflection may then be read from the sliding scale by noting the position on the fixed scale corresponding to the position of the reflection in the TDR display.

You should note that the peak level of any reflection that does not have a discernible plateau may be an erroneous indication of the impedance discontinuity that caused it. There may be several reasons for the error. First, the discontinuity may occupy such a short segment of the line, compared to the propagation velocity of the line and the risetime of the test pulse wavefront that part of the wavefront starts to emerge from the segment while the remainder is still entering. This causes a spike shaped reflection, the amplitude of which may vary depending on the risetime of the test pulse, how badly the risetime may have been degraded by the cable before it arrives, and how much attenuation the cable may impose on the reflection before it arrives back at the source. Secondly, if the risetime of the TDR system is too long, a reflection with a plateau will appear as a spike.

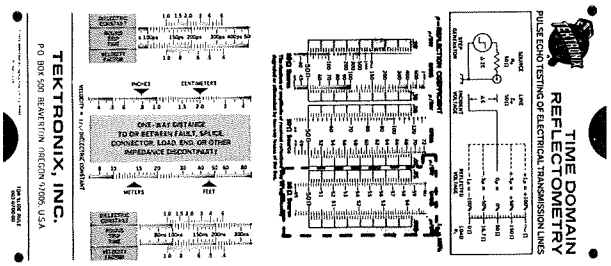

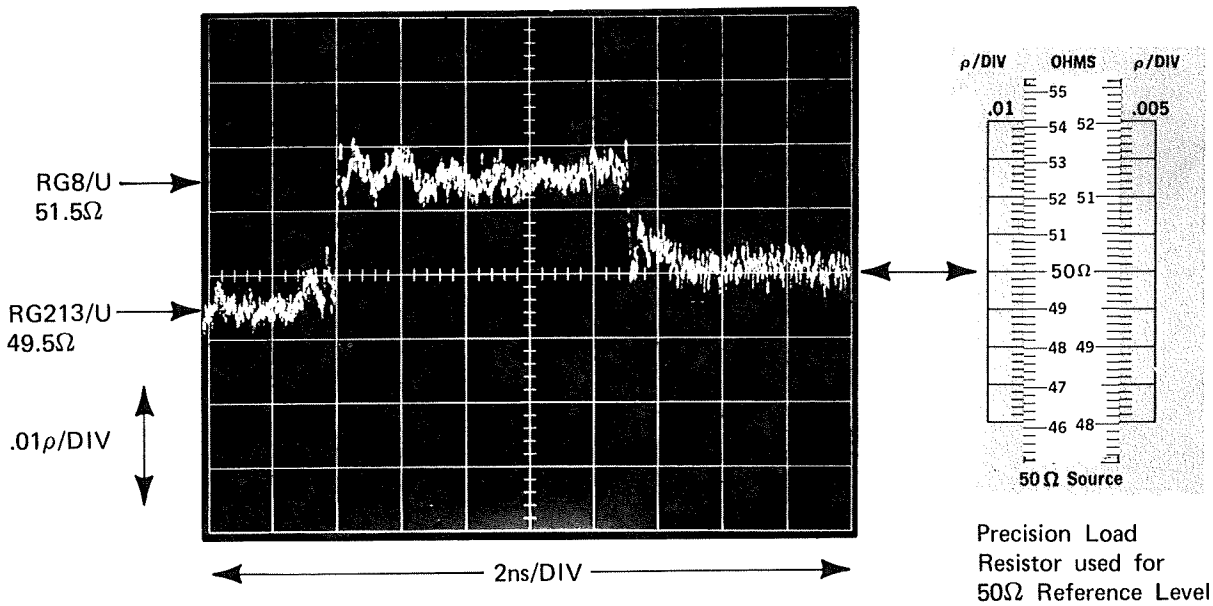

Precision Load Resistor used for 50Ω Reference Level

Vertical = .2ρ/DIV **Horizontal = 5ns/DIV**

4-inch Piece of 73Ω Cable Near Open End of 20 feet of 50Ω RG213/U

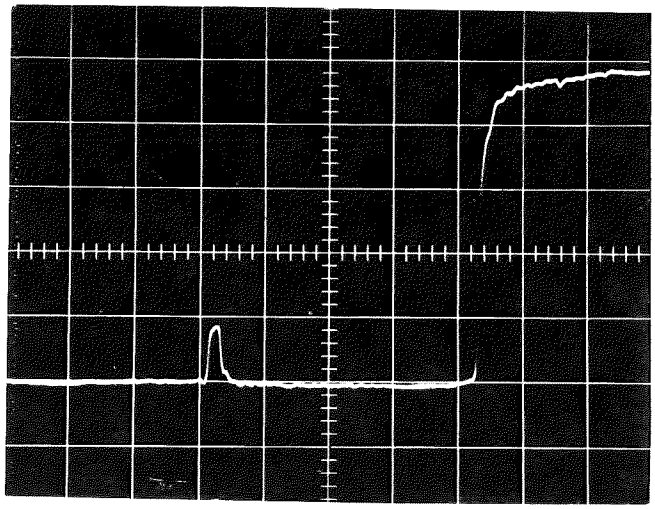

140 ps TDR System
Risetime not degraded
Amplitude correct

4-inch Piece of 73Ω Cable Near Open End of 100 feet of 50Ω RG213/U

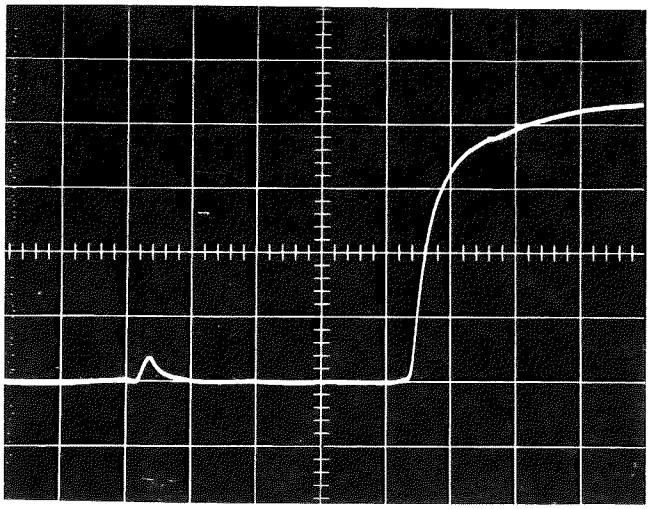

140 ps TDR System
Risetime degraded
Amplitude reduced

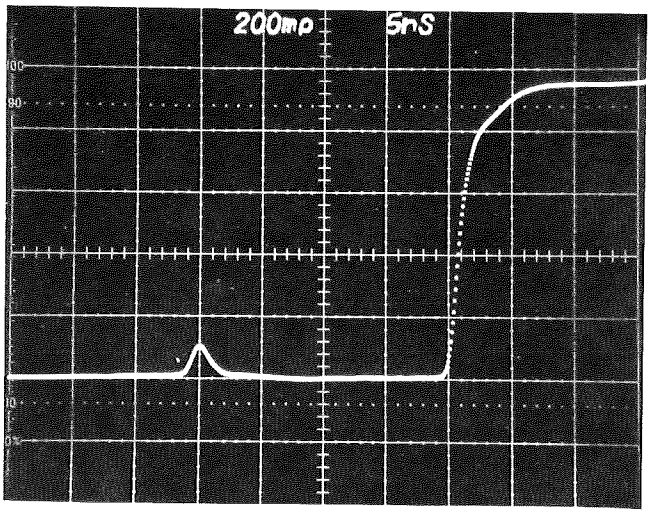

1.5 ns TDR System
Risetime not degraded
Amplitude reduced

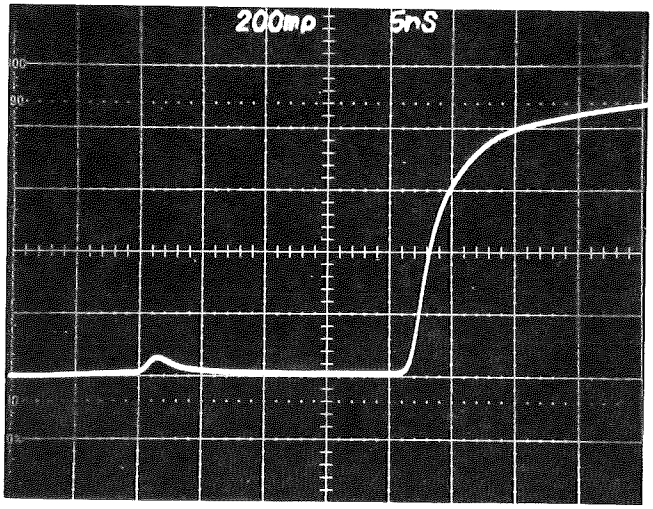

1.5 ns TDR System
Risetime degraded
Amplitude further reduced

6. Centimeters versus Inches, or Meters versus Feet.

1 inch = 2.54 cm

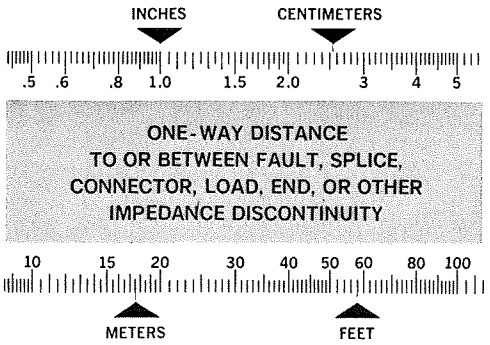

17.5 m = 57.4 feet

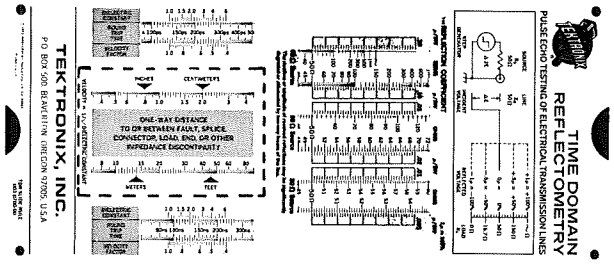

A given number of inches may be converted to centimeters by placing the point on the sliding scale corresponding to that number next to the stationary arrow labeled Inches then reading the equivalent distance in centimeters next to the point of the arrow labeled Centimeters. Centimeters are converted to inches in just the opposite manner. Meters may be converted to feet and vice versa using the Meters and Feet scale in a similar way.

7. Dielectric Constant versus Velocity Factor

Dielectric Constant and Velocity Factor appear on two identical scales next to a sliding scale labeled Round Trip Time. To find one knowing the other read directly across the sliding scale. Any major division on the sliding scale may be placed next to the known value to help read directly across the sliding scale.

To find the distances to or between discontinuities in a transmission line knowing the time for a pulse edge to travel the distance and back (round trip time) it is necessary to know either the dielectric constant of the material between the conductors or the velocity factor of the line. For distances less than about three meters or ten feet use the Centimeters and Inches scale. The round trip time should be located on the sliding scale that is located above the Centimeters and Inches scale. Place the point on the sliding scale next to a point on one of the stationary scales that corresponds to the value of the dielectric constant or velocity factor. Then read the distance on the Inches and Centimeters scale.

If the distance to or between faults is known and you wish to find the time or velocity factor set the distance under the appropriate arrow first.

Distances to or between faults or discontinuities in a transmission line, that are displayed on an oscilloscope or TDR calibrated in units of time only, may be found for most cables without even measuring the time. Use one of the three scales labeled .02 μs/DIV, .05 μs/DIV or .10 μs/DIV. Select the scale corresponding to the time per division used on the oscilloscope. If the TIME/DIV on the scope is a factor of 10 greater or smaller than .02, .05, or .10 μs (.2, .5, 1 μs or 2, 5, 10 ns) the distance finally calculated should be 10X or .1X the amount indicated. After choosing the right stationary scale move the slider to choose the scale that corresponds with the kind of dielectric and propagation velocity factor the line has—either AIR (1), FOAM polyethylene (.81), TFE (.698) or solid POLYethylene (.659). Each of the four scales has ten divisions, the same as the oscilloscope, so if you set the scope display so the incident pulse edge is at the left edge of the CRT scale you should set the left edge of the slide rule scale next to zero (0) feet or meters. Then you may read the distance to the reflection by noting the point on the Feet or Meters scale that corresponds to the position of the reflection on the sliding scale. Remember to multiply by 10 if the scope was set to .2, .5 or 1 μs per division or to divide by 10 if the scope TIME/DIV was 2, 5 or 10 ns. Distances between two points in a transmission line that are each causing a reflection may be measured as above by positioning the first reflection to the left edge of the scale the same as for the incident pulse edge.

8. Time versus Short Distances, in Centimeters or Inches, any dielectric.

Dielectric is Air

Time = 200ps

Velocity Factor = 1

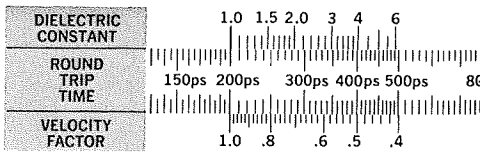

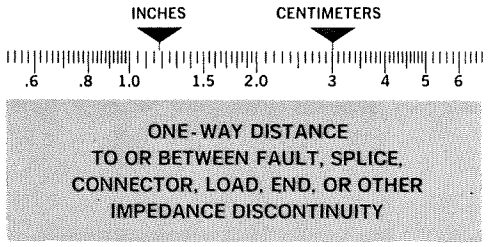

Distance is 3.0 cm or 1.18 inches

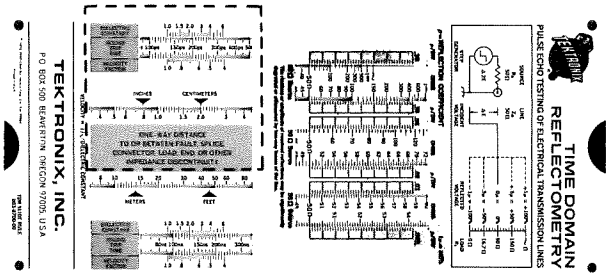

9. Time versus Long Distances, in Meters or Feet, any dielectric.

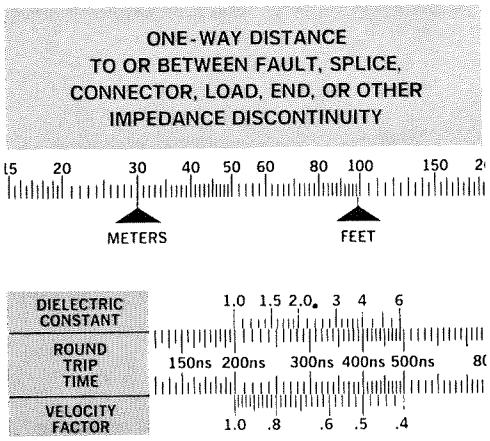

Distance is 30 meters or 99 feet

Dielectric is Solid Polyethylene

Time = 300ns

Velocity Factor = .66

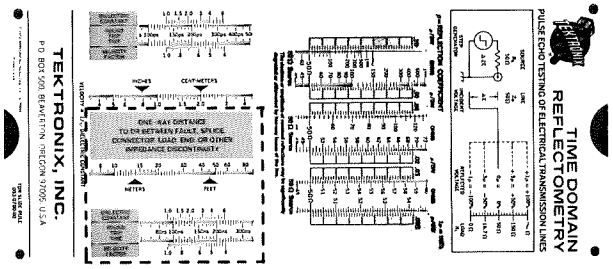

To find the distances to or between discontinuities in a transmission line knowing the time for a pulse edge to travel the distance and back (round trip time) it is necessary to know either the dielectric constant of the material between the conductors or the velocity factor of the line. For distances less than about three meters or ten feet use the Centimeters and Inches scale. The round trip time should be located on the sliding scale that is located above the Centimeters and Inches scale. Place the point on the sliding scale next to a point on one of the stationary scales that corresponds to the value of the dielectric constant or velocity factor. Then read the distance on the Inches and Centimeters scale.

If the distance to or between faults is known and you wish to find the time or velocity factor set the distance under the appropriate arrow first.

Distances to or between discontinuities further apart than about three meters or ten feet may be found on the Meters and Feet scale. Use the sliding Round Trip Time scale just below it and follow the same procedure as in 8 above.

10. Distance versus Time seen on your Oscilloscope for cables with AIR, FOAM, TFE or POLYethylene dielectrics.

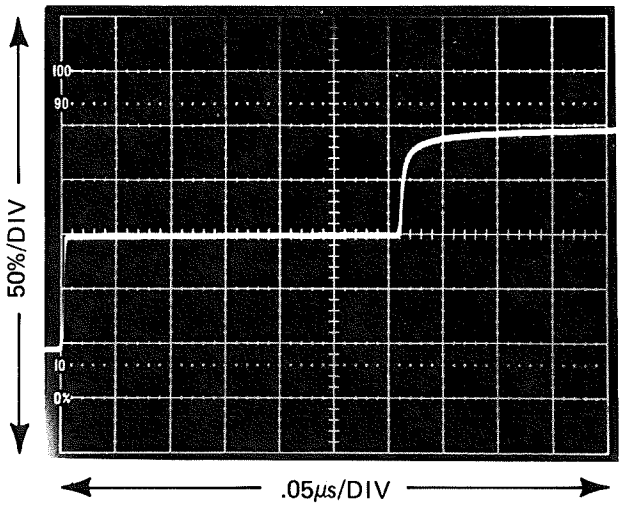

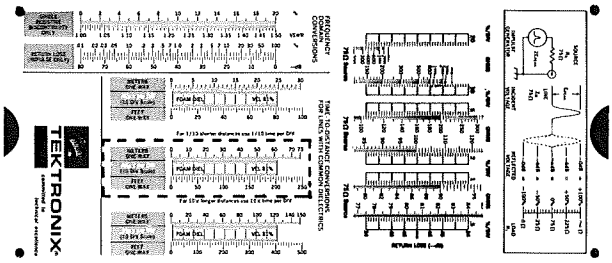

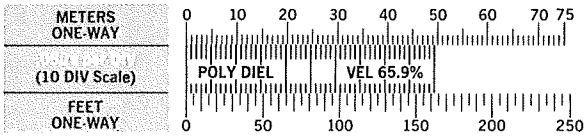

6.2 divisions to open end of cable with solid polyethylene dielectric equals 100 feet at .05μs/DIV.

Distances to or between faults or discontinuities in a transmission line, that are displayed on an oscilloscope or TDR calibrated in units of time only, may be found for most cables without even measuring the time. Use one of the three scales labeled .02 μs/DIV, .05 μs/DIV or .10 μs/DIV. Select the scale corresponding to the time per division used on the oscilloscope. If the TIME/DIV on the scope is a factor of 10 greater or smaller than .02, .05, or .10 μs (.2, .5, 1 μs or 2, 5, 10 ns) the distance finally calculated should be 10X or .1X the amount indicated. After choosing the right stationary scale move the slider to choose the scale that corresponds with the kind of dielectric and propagation velocity factor the line has—either AIR (1), FOAM polyethylene (.81), TFE (.698) or solid POLYethylene (.659). Each of the four scales has ten divisions, the same as the oscilloscope, so if you set the scope display so the incident pulse edge is at the left edge of the CRT scale you should set the left edge of the slide rule scale next to zero (0) feet or meters. Then you may read the distance to the reflection by noting the point on the Feet or Meters scale that corresponds to the position of the reflection on the sliding scale. Remember to multiply by 10 if the scope was set to .2, .5 or 1 μs per division or to divide by 10 if the scope TIME/DIV was 2, 5 or 10 ns. Distances between two points in a transmission line that are each causing a reflection may be measured as above by positioning the first reflection to the left edge of the scale the same as for the incident pulse edge.

WARNING

THE FOLLOWING SERVICING INSTRUCTIONS ARE FOR USE BY QUALIFIED PERSONNEL ONLY. TO AVOID PERSONAL INJURY, DO NOT PERFORM ANY SERVICING OTHER THAN THAT CONTAINED IN OPERATING INSTRUCTIONS UNLESS YOU ARE QUALIFIED TO DO SO. REFER TO OPERATORS SAFETY SUMMARY AND SERVICE SAFETY SUMMARY PRIOR TO PERFORMING ANY SERVICE.

SECTION 3
CIRCUIT DESCRIPTION

Introduction

This section of the manual contains a block diagram description and circuit description of the 7S12 TDR Sampling Unit. The block diagram description explains the purpose and interrelationship of the 7S12 circuits. The circuit description explains the function of each individual circuit.

Circuits of the 7S12 can be broadly classified into two groups: Vertical Circuits and Horizontal Circuits. The vertical circuits provide sampling of the signal to be observed and supply the appropriate voltage levels to the oscilloscope vertical deflection system. The horizontal circuits provide a movable equivalent-time sweep for measuring time or distance.

VERTICAL CIRCUITS BLOCK DIAGRAM

Sampling Heads

The block diagram of Fig. 3-1 shows the 7S12 Vertical Circuits. Since the 7S12 requires a sampling head, Fig. 3-1 includes a simplified block diagram of a typical sampling head.

Signals applied to the sampling head input appear at the input of the sampling bridge. The bridge is normally shut off by reverse bias applied to the sampling bridge diodes. The sampling bridge is turned on for short intervals of time by strobe pulses from the Avalanche and Snap Off circuits. These circuits are controlled by drive pulses from the 7S12.

When the sampling bridge diodes conduct, a sample input signal is taken. If the input signal amplitude differs from that which occurred during the previous strobe interval, a signal appears at the sampling bridge output (otherwise, no signal appears.) The signal amplitude at the bridge output is dependent upon the difference between the bridge input and output levels during the strobe interval.

The sampling bridge output signal is called the error signal. A small storage capacitance at the sampling head Pre-amplifier input time-stretches the error signal. In this way, the vertical amplifiers can amplify error signals having a moderate rate of rise. After amplification by the sampling head Pre-amplifier the error signal is applied to the Post Amplifier in the 7S12.

For more detailed information about sampling heads, consult the instruction manual for your sampling head. The publication, "Sampling Oscilloscope Circuits", (available through your Tektronix Field Office) contains an extensive discussion of subjects such as sampling efficiency, forward attenuation, feedback attenuation, loop gain and DC offset.

Pulse Amplifier Chain

The Post Amplifier, AC Amplifier, and Memory (together with the Pre-amplifier in the Sampling Head), supply the gain needed to provide the approximate 1.23 volt per division Memory output. The Forward Attenuator maintains the correct amplifier gain for the deflection factor selected.

The AC Amplifier output is coupled to the Memory input only at strobe time, when the Memory Gate is opened by the memory gating pulse. Each time the Memory Gate is turned on, the error signal (if any) corrects the Memory output voltage to reflect the latest sampled value of signal at the sampling head input.

Memory output will change in correct proportion to the change in input signal if the forward loop gain is unity. With the UNITS/DIV switch set at 2 or 5, additional capacitance is connected between the input and output of the Memory circuit. Selecting HIGH RESOLUTION adds still more capacitance. Increasing the value of the Memory feedback capacitor reduces the gain of the Memory, and therefore reduces loop gain below unity. The display of random high-frequency noise is reduced by this reduction in loop gain.

If loop gain is less than unity, the displayed risetime of the input signal will be increased unless adequate dot density is maintained. See the Smoothing discussion in the Operating section of this manual.

Feedback Attenuator

The Feedback Attenuation must be correct if the deflection factor calibration is to be correct. The Feedback Attenuation determines the volts per division output of the Memory.

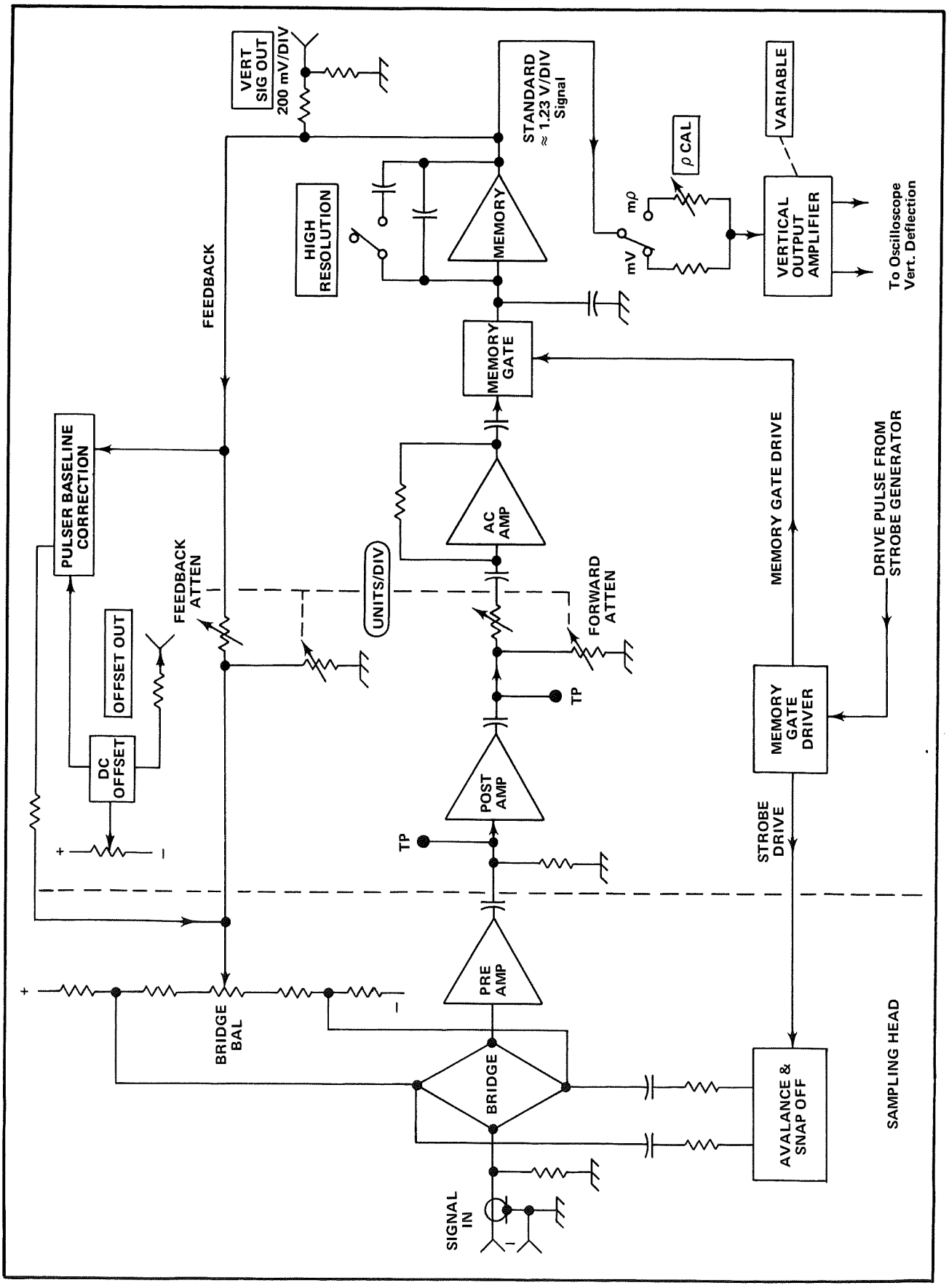

Fig. 3-1. Vertical Block Diagram.

An error signal will appear at the sampling head output if the Memory output voltage does not represent the input signal amplitude at the last strobe interval. When the Memory output voltage represents the last strobed value of sampling head input signal, the attenuator must provide a voltage to the bridge output that equals the sampling head input signal. The amount of Feedback Attenuation required is therefore dependent upon the deflection factor selected.

In order to maintain unity gain when the deflection factor is changed, the UNITS/DIV switch controls both the Forward and Feedback Attenuators. As more sensitive settings of the UNITS/DIV switch are selected, the Forward Attenuation is reduced and the Feedback Attenuation is increased by the same factor, thereby maintaining loop gain at unity.

DC Offset

The DC Offset circuit provides a DC voltage (−1 volt to +1 volt) that is added to the Feedback voltage from the Feedback Attenuator. This permits the display of small voltage changes superimposed on relatively large DC levels.

The amount of offset voltage can be determined by measuring the voltage at the front panel OFFSET OUT jack. This is explained in the 7S12 Operating Instructions.

Vertical Output Amplifier

With the mV-mρ switch in the mV position, the approximate 1.23 volt/div output of the Memory is more than is required at the input of the Vertical Output Amplifiers to produce the correct vertical deflection on the CRT. The Memory output voltage is reduced by voltage division approximately 240 mV/division.

Since the reference pulse amplitude is dependent on pulse generator output amplitude (and most pulse generator heads are limited to about 200 mV output), the selection of mρ increases the vertical sensitivity to about twice normal. Sensitivity is increased by applying a greater percentage of the Memory output (see ρ CAL adjustment in Fig. 3-1) to the input of the Vertical Output Amplifiers.

The front panel VARIABLE control changes the gain of the Vertical Output Amplifiers. This control provides a means of increasing or decreasing vertical sensitivity from the calibrated value.

The output of the Vertical Output Amplifier is fed to the vertical deflection circuits of the oscilloscope.

Pulser Baseline Correction Circuit

The Pulser Baseline Correction circuit (see Fig. 3-2) sets the displayed pre-pulse baseline to zero for any termination

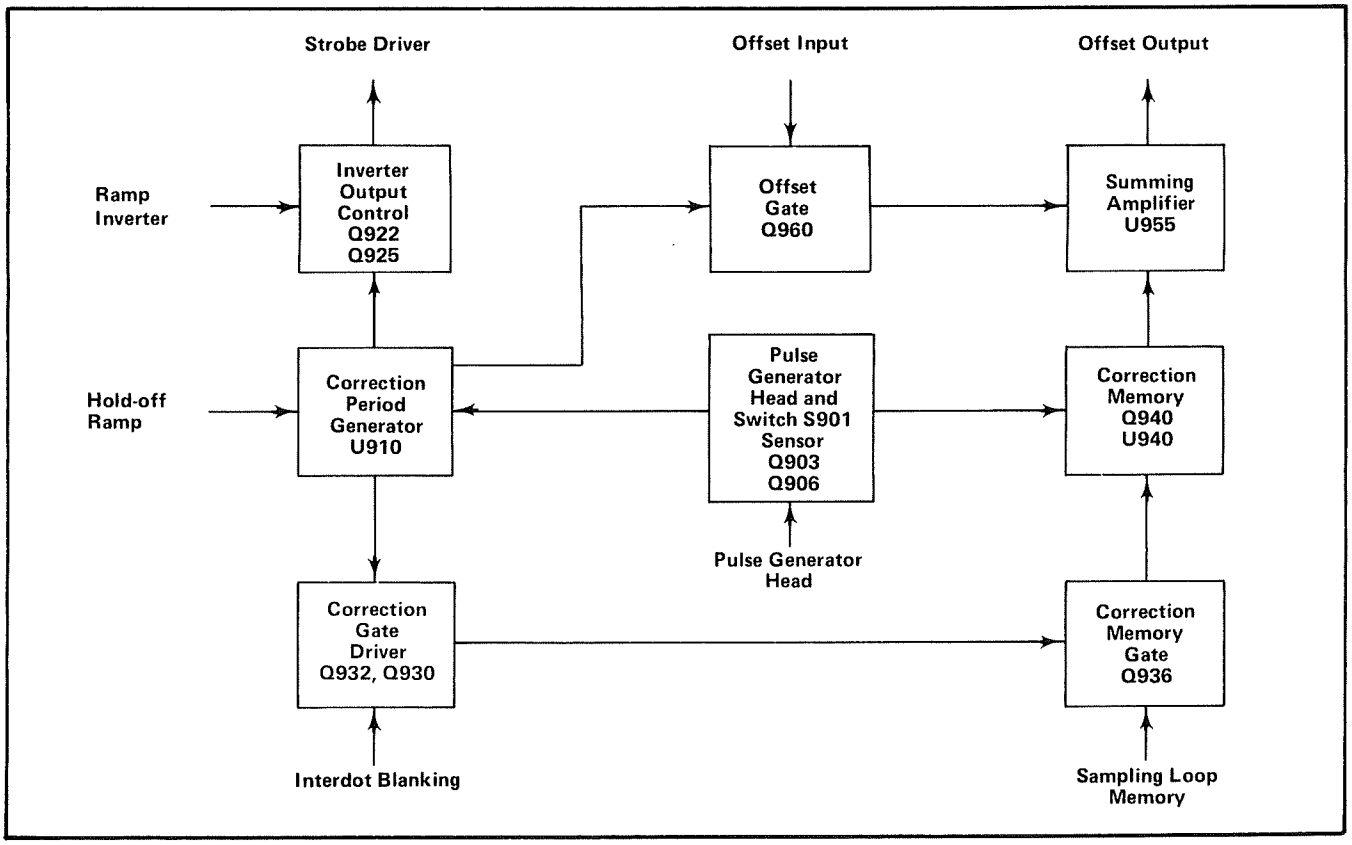

Fig. 3-2. Pulser Baseline Correction circuit block diagram.

that may be attached to the coaxial line on the Sampling Head input. The Pulser Baseline Correction circuit recognizes if an S-52 or an S-54 Pulse Generator Head is installed in the Pulse Generator compartment of the 7S12 with switch S901 in the Normal (center) position. The Pulser Baseline Correction circuit does not operate when Trigger Countdown or Trigger Heads are installed in the Pulse Generator compartment, unless switch S901 is set at the On (forward) position.

The Correction Period Generator compares a DC level and the Slow Scan Hold-off Ramp (see Fig. 3-3). This comparison occurs at the end of each sweep of the trace. The signal from the Correction Period Generator drives the Offset Gate and the Correction Gate Driver. The Correction Gate Driver gates the interdot blanking signals which turn on the Correction Memory Gate. Vertical Sampling Loop Memory signals through the gate drive the Correction Memory. The Correction Memory signal is applied to the Summing Amplifier, which also receives the manually controlled DC offset voltage from the Offset Gate. The Summing Amplifier output is the corrected offset voltage to the Sampling Head.

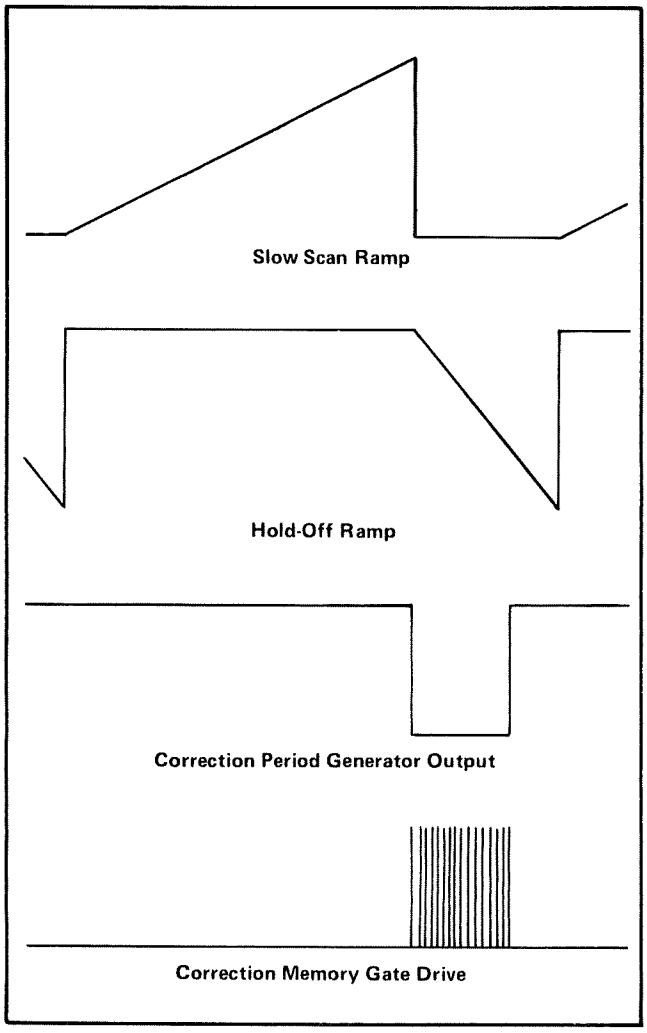

Fig. 3-3. Pulser Baseline Correction circuit waveforms showing signal events relative to the slow scan ramp.

The Pulse Generator Head Sensor enables the Pulser Baseline Correction circuit when switch S901 is in the on position, or when an S-52 or an S-54 Pulse Generator Head is installed and switch S901 is in the Normal position.

HORIZONTAL CIRCUITS BLOCK DIAGRAM

Trigger and Trigger Holdoff

The pretrigger pulse from the S-52 or S-54 Pulse Generator is coupled to the 7S12 Trigger Circuit (See Fig. 3-4A). If the 7S12 Trigger Holdoff times has elapsed, the pretrigger pulse causes the Trigger Circuit to start the rundown of the Fast Ramp circuit. Setting the Multiplier switch to the X10 position (the slowest sweep) adds capacitance to the trigger hold-off circuit to increase hold-off time.

Fast Ramp

The slope (rate of change) of the Fast Ramp output depends upon which of the three fast ramp timing capacitors is selected (see Fig. 3-4A and C). This selection is made by the TIME/DISTANCE Multiplier switch. The Fast Ramp output is used by the Pulser Comparator and the Strobe Comparator.

Pulser Comparator and Pulser Driver

The Pulser Comparator (Fig. 3-4A and 3-4B) determines the delay between the pulse generator pretrigger and TD (tunnel diode) output pulse. The delay circuit in the pulse generator is disabled when the pulse generator is used in the 7S12. The 7S12 Pulser Comparator provides a separate trigger for each of the three 7S12 ranges.

The three pulser delay (Pulse Registration) adjustments R590, R592 and R594 normally are set so that the pulse generator output pulse will be displayed 0.5 division from the left edge of the graticule (with the TIME/DISTANCE and FINE delay cranked out and the slowest available TIME/DIV setting selected).

When the Fast Ramp output reaches the level set by the Pulser Delay adjustment, the Pulser Driver receives an input from the Pulser Comparator. The output of the Pulser Driver is fed to the Pulse Generator, causing the Pulse Generator to produce an output pulse.

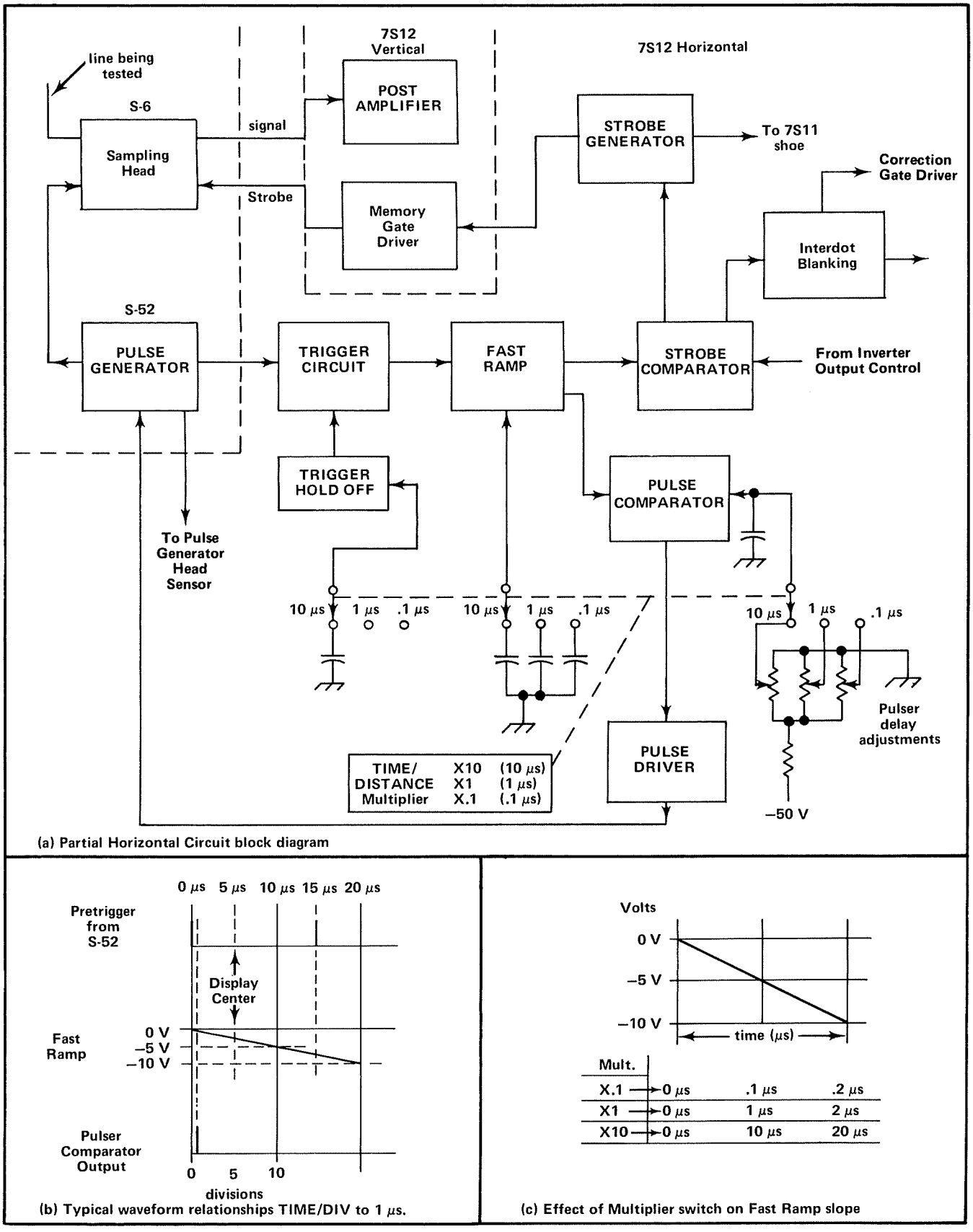

Fig. 3-4. Partial Horizontal circuit block diagram and Fast Ramp voltage versus time waveforms.

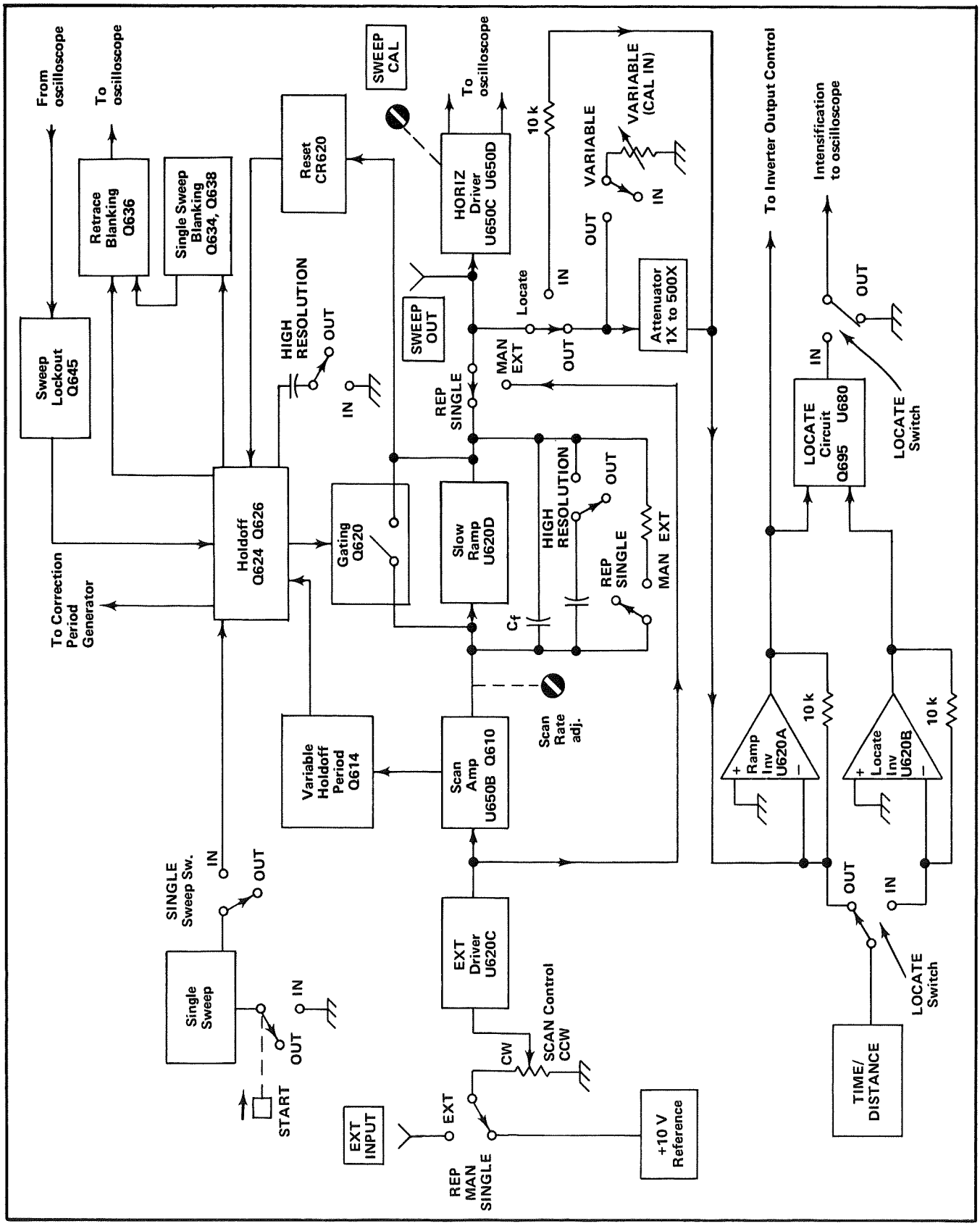

Fig. 3-5. Block diagram of Slow Ramp and associated circuits.

Associated Equipment and Circuits

When using the 7S12 for TDR, the Pulse Generator output pulse and the reflection of this pulse from discontinuities along the test line are the Sampling Head input signals. The Sampling Head output is fed to the Post Amplifier (vertical input) of the 7S12. The Strobe Comparator, Strobe Generator, and Interdot Blanking blocks shown in Fig. 3-4 are discussed later, under the heading of Strobe Comparator and Strobe Generator.

+10 V Reference and External Driver

The +10 V Reference supplies a stable source of DC voltage (see Fig. 3-5). The +10 V output is applied across the SCAN control except when EXT is selected. With EXT selected, the voltage applied to the front panel EXT INPUT connector is applied to the SCAN control. The voltage at the movable contact of the SCAN control is applied to the input of the External Driver.

With MAN or EXT SCAN selected, the output of the External Driver is applied directly to the Horizontal Driver. With manual (MAN) scan selected, rotating the SCAN control from fully CCW to fully CW causes the spot to move 10 divisions, provided that the Horizontal Driver gain (SWEEP CAL) is properly adjusted. When EXT SCAN is selected, the SCAN control attenuates the signal applied to the EXT INPUT connector. The External Driver prevents the Horizontal Driver from loading the external signal source. With REP or SINGLE SCAN selected, the output of the External Driver applied to the input of the Scan Amplifier is utilized.

Scan Amplifier

The Scan Amplifier serves as a constant current source for the integrating circuit that produces the slow ramp. Maximum current is supplied when the SCAN control is fully CW. An internal calibration adjustment is provided to adjust the minimum value of current (SCAN Control fully CCW) delivered to capacitor C_f.

Slow Ramp Generator

The output of the Slow Ramp Generator is a positive-going ramp having an amplitude of approximately 11 volts. This voltage must be 10 volts in order to produce 10 divisions of horizontal deflection. Other considerations make it desirable that the output amplitude of the Slow Ramp Generator be more than 10 volts. It should be understood that timing accuracy is not affected by the Slow Ramp output amplitude; only trace length is affected. Fig. 3-6 shows that with the SCAN control fully CW (solid line), about 20 ms is required to develop a 10 V Slow Ramp output. The affect on Slow Ramp slope of turning the SCAN control slightly CCW is illustrated by the dotted lines of Fig. 3-6. The time required to produce a 10 volt Slow Ramp output is dependent upon the SCAN control setting.

In Fig. 3-5 the output of the Slow Ramp Generator is shown applied to the Reset Circuit, Horizontal Driver, Attenuator network and SWEEP OUT connector.

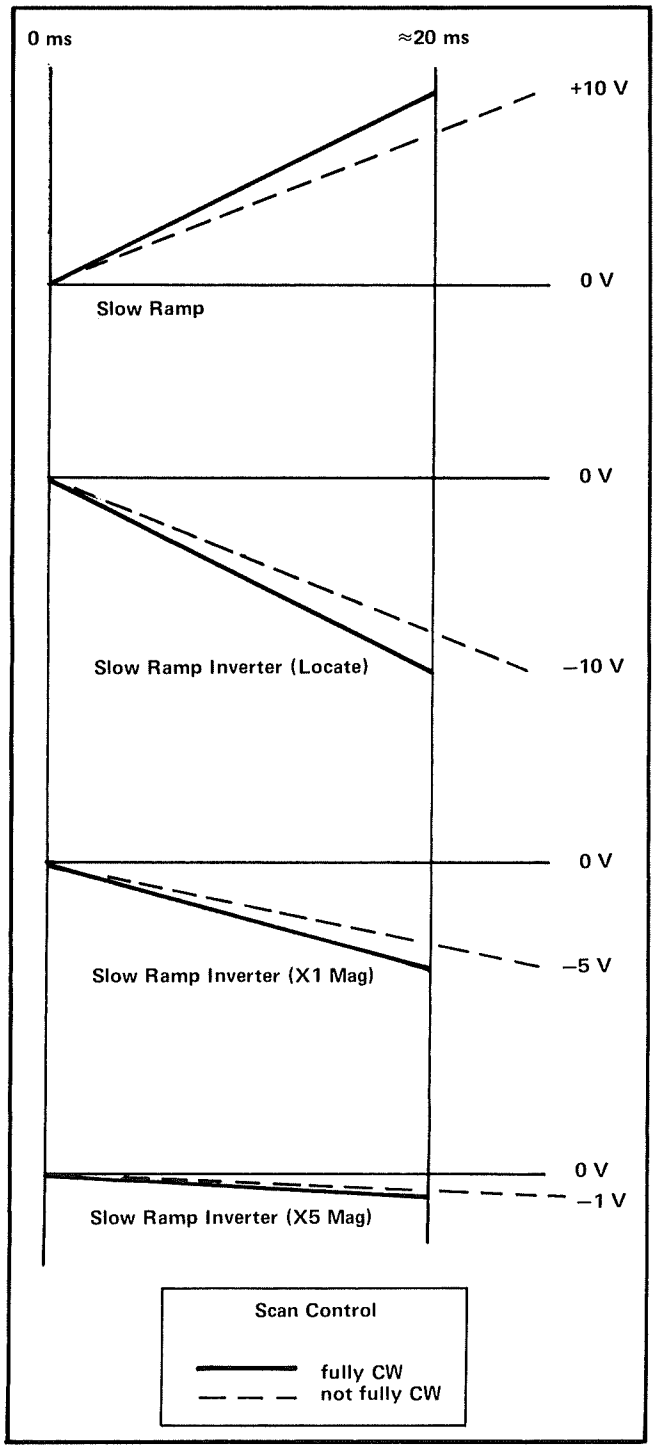

Fig. 3-6. Slow Ramp and Slow Ramp Inverter outputs (TIME/DISTANCE control fully CW to 0 μs.

Reset and Hold-Off Circuits

The Reset Circuit ends the Slow Ramp Generator runup, and the Hold-off circuit provides sufficient hold-off time for recovery of the Slow Ramp Generator. When the Slow Ramp Generator output voltage reaches a value somewhat more than +10 volts, the Reset Circuit initiates (through the Hold-Off and Gating Circuits) the discharge of feedback capacitor C_f. An RC network in the Hold-Off Circuit ensures that sufficient time is provided for complete recovery of the horizontal and vertical circuits before another ramp runup is permitted.

Horizontal Driver

The single-ended output of the Slow Ramp Generator is converted to a push-pull output by the Horizontal Driver. The approximate 0 V to +10 V output of the Slow Ramp Generator appears at the input of the Horizontal Driver as a positive-going ramp running from −5 V to +5 V. This level shift results from an offset network at the Horizontal Driver input. One of the Horizontal Driver outputs runs from −5 volts to +5 volts while the other output is running from +5 volts to −5 volts.

If the Slow Ramp Generator output is 0 volts when the sampling bridge is strobed on, the sample taken is displayed at the sweep start (left edge of the CRT graticule). If the Slow Ramp Generator output is +10 volts at the time of sampling, the sample is displayed at the end of the sweep (10 divisions to the right of sweep start). The horizontal position of the displayed sample is, therefore, directly proportional to the output voltage of the Slow Ramp Generator.

Attenuator and Slow Ramp Inverter

The 10 volt output of the Slow Ramp Generator is also fed to an attenuator network at the input of the Slow Ramp Inverter. The Attenuator input offers 20 kΩ impedance to the output of the Slow Ramp Generator.

If the LOCATE pushbutton is pushed, the Attenuator is bypassed. With the Attenuator bypassed, the 10 volt positive-going output of the Slow Ramp Generator appears at the Slow Ramp Inverter output as a 10 volt negative-going ramp (see Fig. 3-6).

With the LOCATE pushbutton in the "out" position the maximum input signal to the Slow Ramp Inverter is only one-half the attenuator by-passed value. The 10 volt positive-going output of the Slow Ramp Generator appears at the Slow Ramp Inverter output as a 5 volt negative-going ramp, provided the VARIABLE (CAL IN) control is pushed in and the TIME/DIV control is fully counterclockwise. As the TIME/DIV control is rotated from its fully counterclockwise position to its fully clockwise position, attenuation of the 5 V ramp increases from 1X to 500X in a 1, 2, 5 sequence. Output of the Slow Ramp Inverter is inversely proportional to the attenuation (5 volts/Attenuation).

Strobe Comparator and Strobe Generator

The negative-going output ramp of the Slow Ramp Inverter is applied to one input of the Strobe Comparator (Fig. 3-4A). The negative-going output of the Fast Ramp is applied to the other Strobe Comparator input. When the Fast Ramp runs down to the level of the Slow Ramp Inverter output, the Strobe Comparator produces an output. The Strobe Comparator output results in the Strobe Generator delivering a strobe pulse to the Bridge Circuit in the Sampling Head, and a sample of the vertical input signal is taken. The Strobe Generator also provides a strobe pulse to turn on the sampling bridge in an adjacent 7S11 Sampling Unit (if used).

At the time the Strobe Comparator causes the Strobe Generator to deliver strobe pulses, the Strobe Comparator also causes an interdot blanking pulse to be produced.

The attenuation of the Slow Ramp Inverter input signal determines the magnification of the Fast Ramp (See Fig. 3-7A). With the TIME/DIV control set to the slowest rate available, at the selected Multiplier setting, magnification is X1. At X1 magnification the 5 volt output of the Slow Ramp Inverter results in slewing along a 5 volt section of the Fast Ramp while the CRT beam is slowly moving horizontally through ten divisions. The equivalent time of the display is therefore equal to the time required for the Fast Ramp output voltage to change 5 volts. At X5 magnification (See Fig. 3-7B) slewing along a 1 volt portion of the Fast Ramp occurs, and the equivalent time of the display is equal to the time required for the Fast Ramp output voltage to change 1 volt.

Time/Distance Circuit

The Time/Distance circuit provides a means of delaying the displayed portion of the sweep (relative to the pretrigger from the pulse generator).

Comparison of Fig. 3-7A and Fig. 3-7C shows that turning the TIME/DISTANCE control from fully CW (0 μs) to fully CCW (1 μs), shifts the starting level of the Slow Ramp Inverter output from 0 volts to −5 volts. Fig. 3-7C shows that reflected signals occurring during the interval from 1 μs to 2 μs after the pulse generator pretrigger pulse are displayed.

With the TIME/DIV control set to the 20 ns position (X5 Mag) as shown in Fig. 3-7D, the display window is

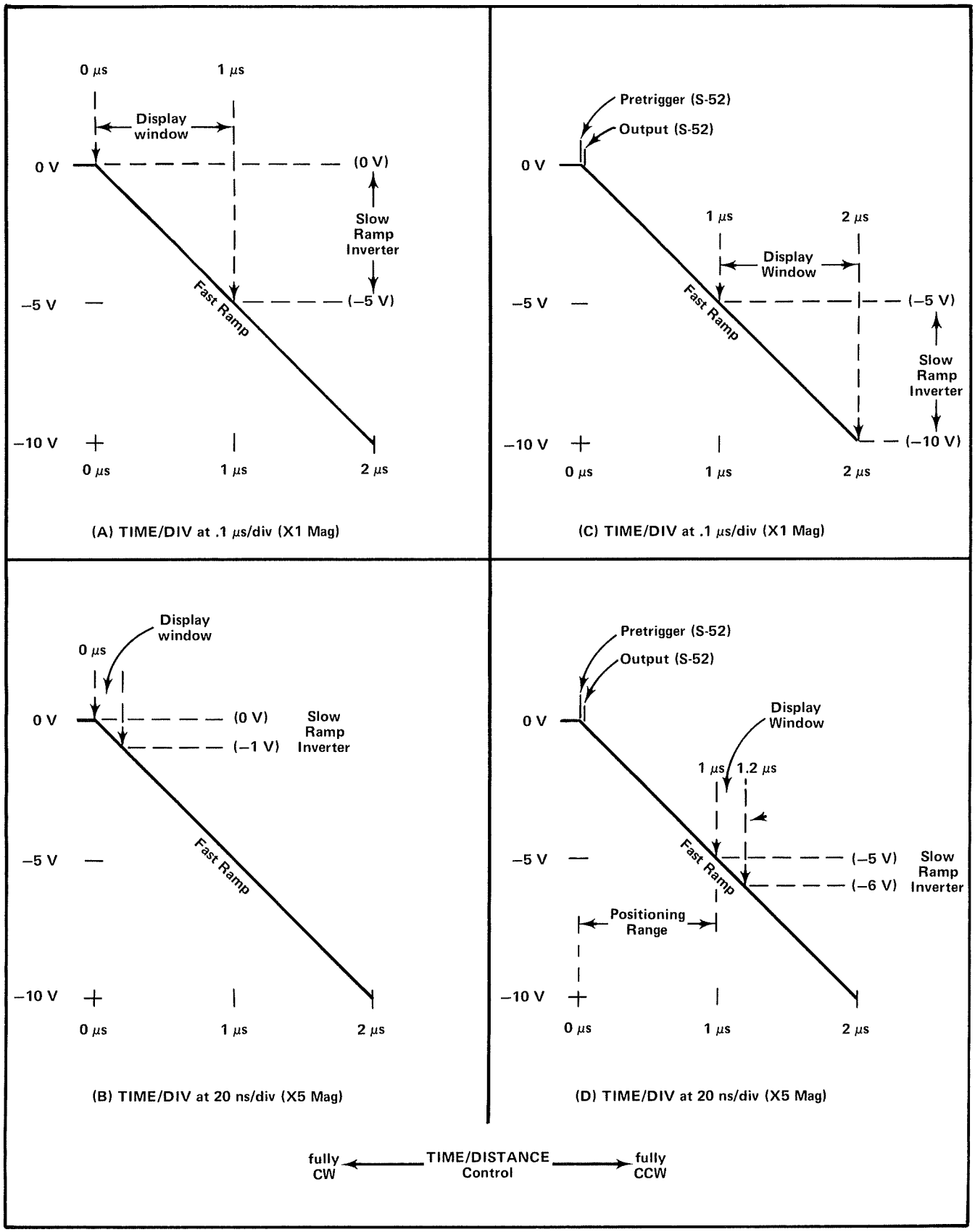

Fig. 3-7. Effect of TIME/DIV and TIME/DISTANCE controls on the display window. (TIME/DISTANCE Multiplier at X1).

narrowed. The output of the Slow Ramp Inverter now runs from −5 volts to −6 volts and signals received from 1 μs to 1.2 μs after the start of the Fast Ramp are displayed. Therefore, the time range displayed is dependent upon the range of voltage at the Slow Ramp Inverter output and the slope of the Fast Ramp.

Locate Inverter

The Locate Inverter is only used (see Fig. 3-5) when the LOCATE pushbutton is at its "in" position. This inverter takes the DC voltage supplied by the Time Distance Circuit and inverts it. The DC output voltage (0 volts to −5 volts) of the Locate Inverter depends upon the setting of the TIME/DISTANCE control.

The output of the Locate Inverter serves as one of the inputs to an integrated circuit used in the Locate Circuit.

Locate Circuit

During LOCATE operation the output of the Slow Ramp Inverter runs from 0 volts to about −10 volts. Since the Slow Ramp Inverter output determines the portion of the Fast Ramp along which slewing occurs (see Fig. 3-7), during LOCATE operation, slewing along the entire 10 volt fast ramp occurs. The time interval displayed across the 10 horizontal divisions on the CRT is therefore, the time from pretrigger (Fig. 3-7A through D) until 2 μs after pretrigger.

During LOCATE operation, however, the normal display window portion of the display is brighter than the rest of the display. Under the conditions shown in Fig. 3-7D, during normal display operation, the time interval from 1 μs to 1.2 μs after pretrigger time is displayed across the ten horizontal CRT divisions. When the LOCATE pushbutton is in, the entire interval from pretrigger until 2 μs later is displayed across the CRT. The portion of the display between the 5th and 6th horizontal division on the CRT graticule (1 μs to 1.2 μs after pretrigger) is brighter than the remaining portion of the trace.

The block diagram of Fig. 3-5 shows the circuit changes that occur during LOCATE operation. The approximate 10 volt output of the Slow Ramp supplies current to the Slow Ramp Inverter through a 10 kΩ input resistor, and a negative-going 10 volt ramp therefore appears at the Slow Ramp Inverter output (see Fig. 3-6).

During LOCATE operation, the output of the TIME/DISTANCE circuit is switched to the input of the Locate Inverter. A DC voltage of 0 volts to −5 volts, depending upon the setting of the TIME/DISTANCE control, appears at the output of the Locate Inverter.

Another change is that the intensity of the CRT display is controlled by the output of the Locate Circuit. Functioning of the Locate Circuit is represented in Fig. 3-8.

The Locate Circuit consists of an IC (integrated circuit) and several external components. The IC portion of the Locate Circuit is shown within the dotted lines on Fig. 3-8. The IC consists of two differential amplifiers, one to start intensification and the other to end it.

Pin 12 of the IC is the output of the "Start" differential amplifier. Pin 7 is the output of the "Stop" differential amplifier. With current through pin 12 or pin 7, the intensity of the CRT trace is normal but with no current through pins 12 and 7 of the IC, the trace is dimmed.

The 0 to −10 volt output ramp of the Slow Ramp Inverter is applied to pins 5 and 10 of the IC. The voltage at pin 11 is determined by the setting of the TIME/DISTANCE control. The voltage at pin 8 is equal to that at pin 11 plus an offset voltage that is determined by the value of the Locate resistor selected by the TIME/DIV switch.

Intensification starts when the voltage at pin 10 drops below that at pin 11. Intensification stops when the voltage at pin 5 drops below that at pin 8.

CIRCUIT DESCRIPTION

The following circuit description follows the sequence of the schematic diagrams at the back of this manual.

Post Amplifier Attenuators ◇1◇

The Post Amplifier is a two-stage non-inverting operational amplifier with AC-coupled complementary emitter followers between the second stage and the output. The input impedance is 90.9 Ω, which properly terminates the coaxial cable feed from the sampling head. Output impedance is very low to provide signal current to the relatively low input impedance of the Forward Attenuator. Total AC gain is approximately 12, producing a 2.4 volt output signal for a 0.2 volt input signal. DC gain is essentially unity, and feedback keeps the amplifier within its proper dynamic range.

Q123 and Q128 are the amplifier transistors, and Q133 and Q136 are the output emitter followers. Q133 ensures low output impedance for positive output signals, and Q136 ensures low output impedance for negative output signals. Each emitter follower has a resistor in the collector for parasitic oscillation suppression. C134 permits the output emitter to be at different DC voltages and ensures that the emitter of the non-driving transistor follows the output voltage.

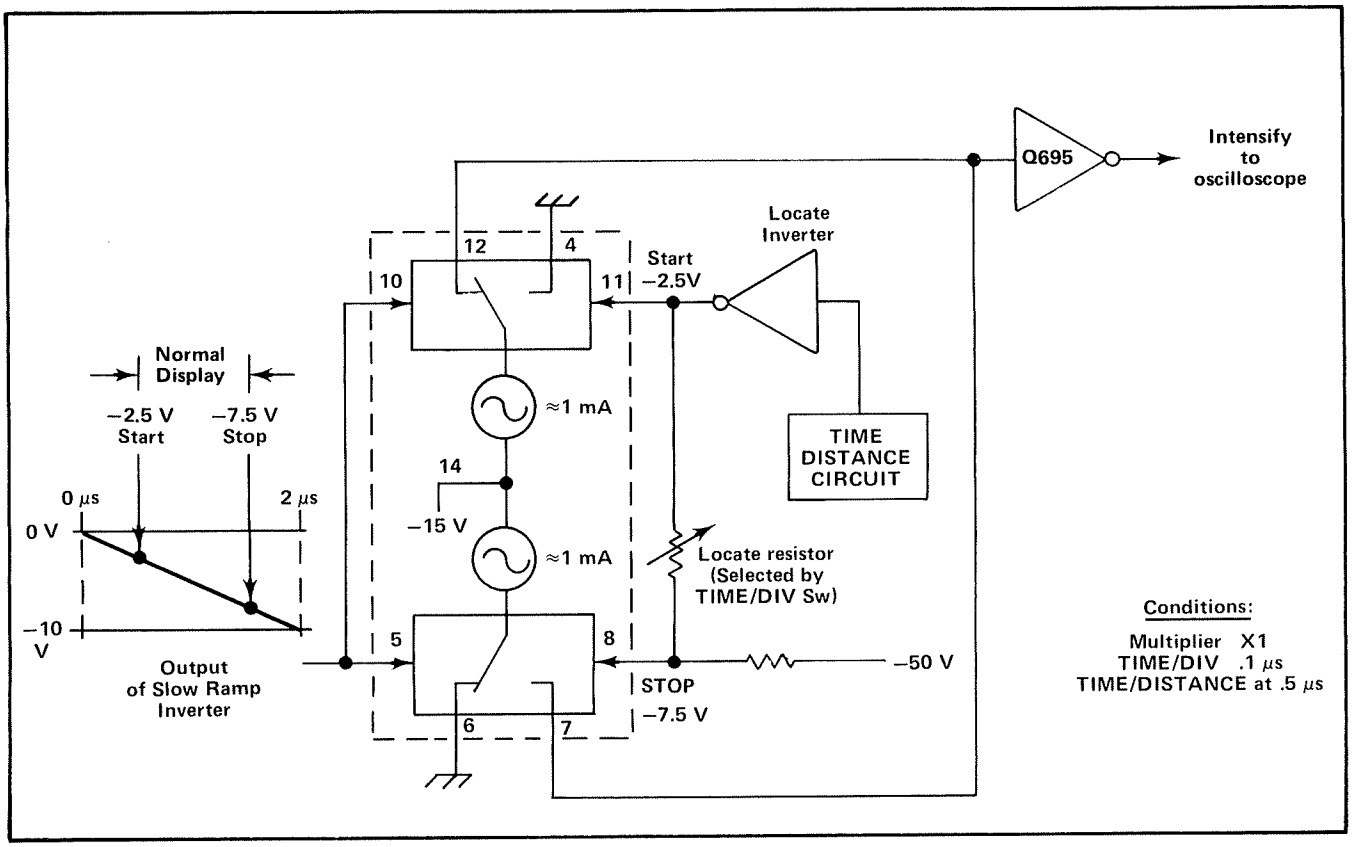

Fig. 3-8. Simplified functional diagram of the Locate Circuit.

Output of the Post Amplifier is AC coupled to the Forward Attenuator (part of the Units/Div switch).

The Forward Attenuator is made up of resistors R145A through R145H. The input resistance to the AC Amplifier is changed by the Forward Attenuator from 1 kΩ to 249 kΩ in eight steps. Seven of the eight resistors are always in parallel connection to ground, while the eighth is in series with the signal to the AC Amplifier input. Signal pulse amplitude across the Forward Attenuator does not change appreciably when the Units/Div switch position is changed, because the Post Amplifier output is a low impedance driving source. Attenuation occurs because of a changing current drive into the low impedance of the operational AC Amplifier.

The Feedback Attenuator is also controlled by the Units/Div control. Rotating the Units/Div control places one of the eight Feedback Attenuator resistors in series with the Memory circuit output signal. The other seven resistors are paralleled and connected from the sampling head side of the series resistor to ground.

The Feedback Attenuator and the DC Offset outputs are connected together within the sampling head, where they are combined and applied to the sampling bridge output terminals.

The DC Offset Circuit is a single transistor emitter follower that converts the fairly high resistance of the DC OFFSET control to a fairly low resistance at the emitter of Q163. Q163 emitter voltage follows the voltage picked off by the movable arm of the DC OFFSET control, offset by −0.6 volt. Q163 drives a resistive load consisting of R163 output resistance, and R962 in the Pulser Baseline Correction circuit, R165, and the Feedback Attenuator. The DC offset voltage at the emitter of Q163 is not affected by the Units/Div switch setting.

Memory ◇2

The Memory diagram includes the AC Amplifier, the Memory Gate, and the Memory Amplifier.

The AC Amplifier is an inverting operational amplifier with AC coupled complementary emitter followers at the output. Q204 is the voltage amplifier, Q208 emitter follower adds current gain to Q204 collector signal, and Q212-Q214 provide the very low output resistance.

The amplifier input is AC coupled by C201 to permit the amplifier DC operating voltages to be independent of the changes made in input resistance by the Units/Div switch. Q204 base is the summing input terminal of the operational amplifier. The AC Amplifier gain is controlled by the ratio of feedback resistor R209 to the value of the series element of R145 in the Forward Attenuator.

The output signal is coupled to the Memory Gate by Q212, Q214 and R219-C219. Resistor R219 limits the signal output current, ensuring that C219 does not receive a significant charge for output signals of high pulse amplitude.

Diodes CR201 and CR206 provide protection when transistors are removed from their sockets. CR201 conducts if Q208 is removed, and CR206 conducts if Q204 is removed. Parasitic suppressing resistors include R206, R207, R211, R213 and R214.

The Memory Gate is a special pulse-driven diode gate that ensures a very high input resistance to the Memory except for about 0.15 to 0.20 μs at the time of each sample. During the conduction time, the Memory Gate is a low impedance that allows the AC amplifier to introduce a charge into the Memory.

The circuits shown on the Memory schematic diagram are shown, in block diagram form, in Fig. 3-9. The Memory Gate is represented by a resistor, a coil and a relay switch. The resistor is the parallel value of the four biasing resistors which ensure that the four gating diodes are normally not conducting. This equivalent circuit shows that the Memory input is zero volts when there is no error signal at sample time.

Looking from the Memory Gate output toward its input, the four gating diodes are normally reverse biased by the voltage of Zener diode VR221. Two of the gating diodes provide very high reverse biased leakage resistance, although they don't turn off very fast. The other two diodes turn off fast at the end of the gating pulse, although they don't provide high resistance when reverse biased. VR221 voltage is balanced to ground by R224 and R226 so CR236 cathode rests at +2.5 volts and CR238 anode rests at −2.5 volts. Capacitor C221 ensures that the AC Amplifier output signal drives both sides of the memory gate diodes.

The gate diodes are forward biased into conduction by T230 at the time of each sample, due to the drive pulse from the Memory Gate Driver. T230 is a toroidal transformer specially wound to balance capacitive and inductive coupling to the two secondary windings. The winding with only one end connected provides the capacitive balance. The magnetic toroid core provides the inductive balance. Thus, the drive pulse is converted to identical drive signals to ensure that the output junction of the four diodes accurately divides the 5 volts of VR221-C221. This places the junction of CR237-CR239 at ground when no error signal is applied from the AC Amplifier. The functions of the two limiting diodes CR224-CR226 and the Memory Gate are covered somewhat later in this discussion of the

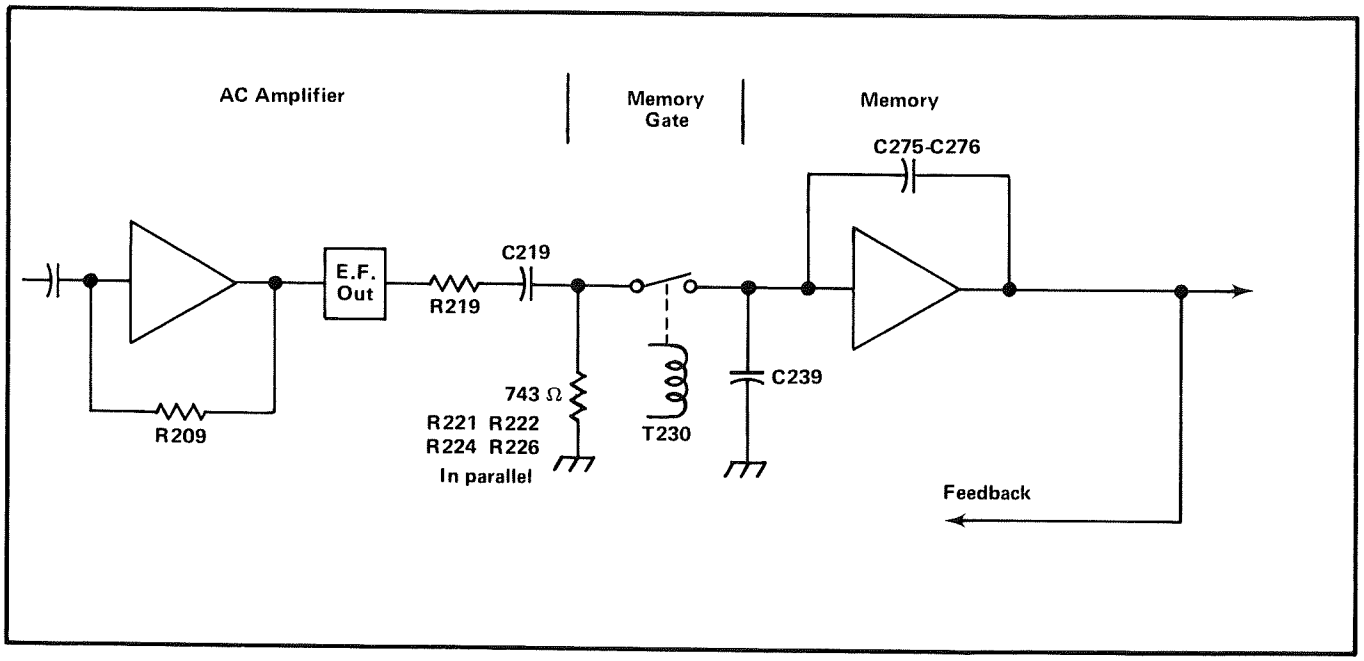

Fig. 3-9. Block diagram representation of circuits shown on the Memory schematic diagram.

Memory circuit. Resistors R229 and R231, and diode CR232 are shunt damping loads to T230 which minimize self-inductance ringing when the memory gate drive pulse ends.

The Memory Amplifier is an integrating operational amplifier with a special low leakage (high DC resistance) input circuit. The input and feedback components are capacitors, making the AC input impedance very low. The internal high gain ensures a very low output resistance; so that as long as there is no change at the input, the output DC voltage remains stable. The input low leakage circuit has no DC connection to ground, except during the time the Memory Gate conducts.

The Memory amplifier is specially decoupled from the power supplies because the output stage (Q262 and Q266) can require a current pulse as great as 30 mA for a 20 volt output change at sample time. The decoupling networks are R261-C261 and R267-C267. Inductor L268 in the VERT SIG OUT and feedback lead presents a high impedance to the Memory output for high frequency (fast change) signals. The inductor ensures that the output amplifier does not have to provide high current to the output load. L268 slows the output signal response, but at a time when the CRT is blanked.

A dual FET (Q242) is the input stage. It is a long-tailed differential amplifier providing a high gain. With no signal applied to the gate of Q242A, the current through each section of the dual FET is about 1 mA. If the input signal drives the gate of Q242A positive, the current through Q242A increases while current through Q242B decreases the same amount. The increase in current through Q242A results in an increase in the drop across diode-connected Q252A. The increased drop across Q252A increases the forward bias of transistor Q252B, causing current through Q252B to increase the same amount as the current through the series combination of Q252A and Q242A. While the current through Q242B has decreased, the current through Q252B has increased by the same amount. The base current of Q256 is therefore reduced by an amount equal to the decrease in current through Q242B, plus the increase in current through Q252B. Transistor Q252 effectively causes doubling of the change in Q256 base current resulting from a given change at the input of Q242A.

Any voltage change at the left Q242 gate lead is amplified and applied to inverting amplifier Q256. Q256 collector circuit applies proper bias to both bases of output complementary emitter follower pair Q262-Q266, and restores the DC level negatively so a zero input signal (at the left side of Q242) is also a zero output signal. Q256 collector and Q262-Q266 output lead operate linearly through the range of +12 to −12 volts.

Because of the high open-loop gain, the Memory Amplifier does not have the fast risetime of preceding amplifiers. The AC Amplifier output pulse duration is shorter than the Memory Amplifier risetime. C239 at Q242 input gate lead accepts some of the charge from the AC Amplifier, stores it until the Memory amplifier can respond, and then loses the charge again due to feedback current.

A cycle of operation at sample time takes the following sequence:

a. The Memory Gate drive pulse arrives at essentially the same time the Sampling Bridge is strobed into conduction. The CRT is blanked during this time. Propagation delay through the three AC coupled amplifiers is quite short. (The fact that the Memory amplifier input is always at zero volts prevents any false changes in C275-C276 charge. Therefore, there is no change in the Memory amplifier output voltage during the time the Memory Gate conducts ahead of the arrival of the AC Amplifier output signal).

b. The AC Amplifier applies a pulse signal through R219-C219 and the Memory Gate to the Memory amplifier input. C239 accepts some of the charge until the amplifier begins to respond, driving an equal and opposite current back to the input through feedback capacitors C275 and C276.

c. Since the AC Amplifier output signal is applied to the Memory amplifier "virtual signal ground" input, C219 receives about 10% of the total error signal charge before the Memory Gate stops conducting. Thus, as the AC Amplifier output returns to its quiescent voltage, the output side of C219 overshoots. Capacitor C219 discharges well in advance of the next error signal.

If the 7S12 is displaying a single transition step over the full graticule with the display starting at the lower left and ending at the upper right, the error signal is very large during retrace. Such large error signals apply a significant charge to C219. In this case, the overshoot at the end of the error signal pulse is large enough to cause one side of the Memory Gate to conduct and remove some of the intended charge in the feedback capacitors. Two normally non-conducting clamp diodes prevent such undesired removal of memory charge. Diodes CR224 and CR226 help to discharge C219 if it receives too great a charge during the Memory Gate conduction time, thus preventing false amplitude displays. These two diodes do not conduct at any other time.

d. As the Memory Gate drive pulse ends, C239 charge is removed by the Memory amplifier feedback. This causes the Memory output voltage to continue changing toward

proper amplitude for a short period of time after the Memory Gate stops conducting. As soon as C239 is returned to normal, the output voltage remains fixed until the next sample.

The actual resting voltage at the gate of Q242A may not be precisely zero, but it is within a few millivolts of zero. Any deviation from zero can be due to several things: slight differences in conduction of the Memory Gating diodes; slight differences in resistance of the four Memory Gate biasing resistors; some small error signal being generated at each sample time even when the sampling head input signal is zero. The gate voltage of Q242B is adjustable to provide correction in spite of variation of these errors between instruments. The Memory Balance adjustment (R245) provides an adjustable voltage to the gate of Q242B.

Capacitor C275 is used to set Memory Gain to approximately unity. Additional capacitance is added to the feedback circuit when 2 mV, 5 mV, or HIGH RESOLUTION is selected. The additional capacitance provided reduces the memory gain but results in a less noisy display.

Memory output voltage limits of about +12 and −12 volts are set by two diodes in parallel with the feedback capacitors. The diodes, CR272 and CR274, are reverse biased by 12 volts each. If the output tries to go more positive than about +12 volts, CR274 conducts reducing the amplifier gain to much less than 1. If the output tries to go more negative than about −12 volts, CR272 conducts, reducing the amplifier gain to much less than 1. The clamping diodes prevent the amplifier transistors from saturating at the time of an overdrive signal, and thus ensure fast transition away from the clamped voltage at the next sample.

CR242 conducts only when Q242 is removed from the socket while the power is on, thus keeping −50 volts off the source leads when Q242 is plugged in. Temperature compensation of the amplifier is accomplished effectively by the source-coupled FET input amplifier and CR257 and CR259. Transistor Q252 is an active load for Q242. This active load causes the signal current to the base of Q256 to be about twice the signal current out of the drain of Q242B. Transistor Q252 also serves to speed up the circuit response time. The two identical halves of Q242 compensate each other so their total current does not change with temperature change. CR257 and CR259 have junction-drop temperature coeficients similar to Q262 and Q266 base-emitter junctions, and thus stabilize the output circuit.

The Memory amplifier drives the front panel vertical output jack through a resistive attenuator. The jack is labeled VERT SIG OUT, 0.2 V/DIV, 10 kΩ.

Gate Generator and Vertical Output ◇3◇

Gate Generator. The sampling drive pulse from the Strobe Comparator is slewed in time from the initial sweep triggering of the Fast Ramp, and can be further delayed using the TIME/DISTANCE control. The Memory Gate Driver circuit provides the proper time-positioning of the Memory Gate pulse so that the error signals are gated at the correct time.

The Memory Gate Driver is preceded by a blocking oscillator (Q370 and associated components) which standardizes the risetime and amplitude of the strobe pulse. Until the positive sampling drive pulse occurs, Q370 is cut off and its collector is at +15 volts. The arriving pulse causes the transistor to start conduction as a normal amplifier, but the regenerative feedback from T370 via CR370 quickly drives Q370 into saturation. As the current through T370 reaches a steady value, the counter-EMF generated in the secondary is stopped by the reverse-biasing of CR370. Q370 remains in saturation until it is cut off when the sampling drive pulse ends.

The Memory Gate Driver circuit consists of a low-current amplifier (Q382) and a monostable multivibrator (Q386-Q394). At quiescence, the base voltage of Q382 (determined by the Delay Cal adjust R380) is between +11 and +15 volts. The current through Q382 is about 1 mA, which is insufficient to forward-bias Q386. Diode CR385 holds the base of Q386 at −15.6 volts to ensure that the Memory Gate Driver output does not change as the Delay Cal setting is changed. Q394 is reverse-biased by the current through R391, R390 (Memory Gate Width adjustment), CR392 and R392, and its base voltage is clamped at +0.6 volt by CR394. The collector voltage of Q394 rests at −14.5 volts.

When the blocking oscillator fires, the negative-going transition at Q370 collector appears as a fast negative-going signal at the base of Q382. The ramp voltage drops to a level (determined by the Delay Cal setting) sufficient to forward-bias CR374 and shortly thereafter, Q382 is driven to conduct harder. The additional current required by the emitter of Q382 is furnished by C381, and the collector of Q382 rises far enough to forward-bias Q386. When Q386 conducts its collector voltage drops, the negative change is coupled by C390 to reverse-bias CR392, which turns on Q394. R394 applies a steady 50 mA current to the Memory Gate transformer primary (T230) for about 180 nanoseconds. The positive-going change at the collector of Q394 is coupled back to the base of Q386 as positive feedback, holding Q386 in conduction.

The negative-going transition at the collector of Q386 is also coupled via C387 and C377 to the base of Q382, holding that transistor in hard conduction. The Strobe for

the sampling head is taken from the junction of C387 and C377.

The regeneration from C377 to Q382 does not last as long as that holding Q386 in conduction, but since the base voltage of Q386 cannot go more positive than about −14.4 volts, Q382's collector voltage does not change. The position of the Memory Gate Width control adjusts the charge rate of C390, and therefore the conduction time of Q394. The conduction time and gate duration vary directly with the resistance of R390.

As C390 charges toward +15 volts, CR392 again conducts and turns Q394 off, ending the Memory Gate pulse and the drive to the base of Q386. However, Q386 was in saturation, so it does not stop conducting immediately. The collector voltage of Q386 rises positive about 350 ns after the transistor is turned on. This RC rise is slow and does not couple much energy through either C387 or C390.

Vertical Output Amplifier. The Memory output is applied to the input of the Vertical Output Amplifier through one of two attenuators. The voltage divider consisting of R304 and R302 in series is used when mV is selected at the front panel. With ρ/DIV selected, the series combination of R305 and R303 is used. Resistor R305 is the front panel screwdriver adjustment labeled ρ CAL, which permits proper ρ/DIV calibration.

The Vertical Output Amplifier consists of a two-stage push-pull balanced circuit. The first stage includes the VARIABLE gain control (R320) and the Position Balance adjustment (R325) in the common emitter circuit of Q314 and Q334. The Position Balance adjustment changes the current through each side of the push-pull circuit for a center-screen output voltage. Gain of the stage is controlled by the VARIABLE control. Maximum gain occurs with minimum resistance between the two emitters. The Variable Balance adjustment (R335) sets the level on the base of Q334 so that no current flows between emitters under no-signal conditions. This ensures that there is no ground reference shift of the trace when the VARIABLE control is turned.

The second stage of the Vertical Output Amplifier includes the VERT GAIN adjustment (R345), which varies the emitter degeneration of Q344 and Q354. The push-pull outputs are applied to the oscilloscope vertical amplifier.

Real Time Trigger. The Real Time Trigger amplifier (Q362 and Q366) is a balanced circuit with push-pull input from the first stage of the Vertical Output Amplifier. Positive and negative trigger signals are applied to the timing unit through the oscilloscope interface. Signal amplitude at the trigger output is about one-half of that at the output of the Vertical Amplifier.

Vertical Readout Logic ◇4◇

The readout logic in the 7S12 provides the necessary time-slot current to operate the Scale Factor readout on the indicator oscilloscope. Currents supplied from the 7S12 controls the display of appropriate symbols. The circuit used to determine row and column current is basically as shown in Fig. 3-10.

Table 3-1 lists functions performed on symbols displayed with various values of column and row current. Consult your 7000 series oscilloscope manual for additional information about Scale Factor Readout.

Table 3-1

Signal Currents for Readout Logic Symbols

Time Slot	Function or Character Selected	Row Current (B37)	Column Current (A37)
1 (B33)	Add one zero	.2 mA	.1 mA
	Add two zeros	.2 mA	.2 mA
	Reduce prefix	.2 mA	.3 mA
	Reduce prefix and add one zero	.2 mA	.4 mA
	Identify	.2 mA	⩾1 mA
3(B32)	>	.1 mA	⩾1.0 mA (R428)
	<	.1 mA	0.2 mA (R427)
4 (A32)	1	0.0 mA	0.2 mA (R421)
	2	0.0 mA	0.3 mA (R421 and R422)
	5	0.0 mA	0.6 mA (R421 and R423)
8 (A30)	m	0.3 mA	0.1 mA
9 (B29)	V	0.4 mA	0.2 mA
10 (A29)	ρ	0.3 mA	0.4 mA

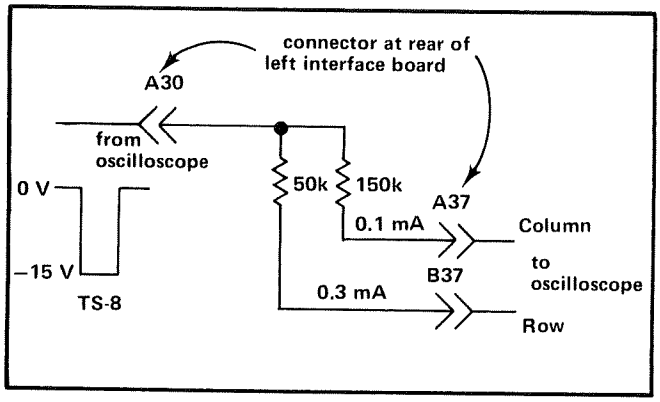

Fig. 3-10. Basic readout logic circuit.

Time Slot 1

As shown in Table 3-1, the Vertical Readout Logic of the 7S12 can send the following instructions to the readout oscilloscope: add one zero, add two zeros, reduce prefix, reduce prefix and add one zero, and display IDENTIFY.

With the UNITS/DIV switch set to 10, 20, or 50 the 0.1 mA column current through R424 and the 0.2 mA row current through R431 instruct the readout oscilloscope to display a zero following the 1, 2, or 5 selected during time slot 4. Switching the UNITS/DIV to 100, 200, or 500 results in adding two zeros.

Transistor Q416 permits control of the readout by a probe and sampling head combination (i.e. P6052 probe and a Type S-5 Sampling Head) having this capability. Switching the probe to the 10X position results in a 0.1 mA current through Q416. This 0.1 mA of column current is added to any current through R424 or R425. With 500 mV/Div selected and the probe attenuation switch to 10X, a 0.3 mA current results. This 0.3 mA column current selects "reduce prefix" (equivalent to adding three zeros) and 5 V/Div is displayed.

If the probe is switched to "IDENTIFY", current through Q416 is about 1 mA. This 1 mA plus any current through R424 or R425 results in a column current $\geq$1 mA, and IDENTIFY is displayed on the oscilloscope.

The circuitry consisting of Q402, Q406, Q408, and Q412 together with associated components is provided for future use.

Time Slot 3

When the VARIABLE (CAL IN) knob is in the out position (uncalibrated) the symbol for less than (<) will be displayed, provided that the VARIABLE control (R320) is CCW from its approximate midposition. A 0.2 mA column current through R427, and the switch contact closed when the control is out (S320), results in the selection of the symbol less than (<). When the VARIABLE control is rotated CW past its approximate midposition, switch S146A closes. The approximate 1 mA current through R428 plus 0.2 mA current through R427 provide a column current of more than 1 mA. This column current together with the row current of 0.1 mA through R435 results in the selection of the symbol for greater than (>).

Time Slot 4

Depending upon the position of the UNITS/DIV switch (S146) the numeral 1, 2, or 5 is selected for display during time slot 4. Row current is not required and no path for row current exists. When the numeral "1" is required a 0.2 mA column current is provided through R421. Column current required to select a "2" is provided through R421 and R422. A "5" is selected by the column current through R421 and R423.

Time Slot 8

The symbol for milli (m) is displayed during time slot 8. This symbol is selected by the 0.1 mA column current through R413 and the 0.3 mA row current through R437.

Time Slot 9

The symbol for volts (V) can be displayed during time slot 9. With a sampling head intended for measuring voltage, pin F of J120 is grounded. This provides a base voltage on Q418 that permits a 0.2 mA column current through R419. Since the row current through R439 is 0.4 mA, the symbol for volts is displayed.

Time Slot 10

If the mV-mρ switch (S304) is in the mρ position no column current can flow during time slot 9. When mρ is selected Q417 turns on, causing Q418 to shut off. With Q418 off, no column current can flow during time slot 9 and no symbols will be displayed during this period. The symbol for rho (ρ), however, will be displayed during time slot 10. The rho symbol is selected by the 0.4 mA column current through R429 and the 0.3 mA row current through R433.

Trigger, Fast Ramp, Pulser Driver, and Strobe Driver ◇5◇

Introduction. An input trigger from an S-series pulse generator or trigger recognizer is fed to the base of Q508 (see Fig. 3-10 and schematic diagram 5). This results in the turn-on of Q504. A positive pulse appears at the collector of Q504 while it is turned on.

The leading edge of the positive-going pulse at the collector of Q504 turns on Q518, which pulls up on the base of Q520. With Q520 shut off, the 5 mA timing current through Q522 results in producing a negative-going fast ramp across timing capacitor C520 and C535.

The duration of the positive pulse at Q504 collector provides adequate time for the Fast Ramp to complete its run. When the positive pulse ends, the Fast Ramp is reset to zero to await the next trigger pulse.

Trigger Circuit and Trigger Holdoff. Time designated 1 through 5 are shown for the table and waveforms of Fig. 3-11. Reference to this information will aid in understanding the sequence of events in the Trigger and Trigger Hold-off Circuits. Transistor Q508 conducts at all times, but has two conducting levels. In the table portion of Fig. 3-11, the low current state (about 0.33 mA) is indicated using small letters ("on") and heavy current conduction by capital letters "ON".

Prior to the arrival of the trigger pulse from the S-series head (time 1), the state of transistors in the Trigger and Trigger Hold-off circuits is shown in the table portion of Fig. 3-11. Looking down the column headed (1) shows that

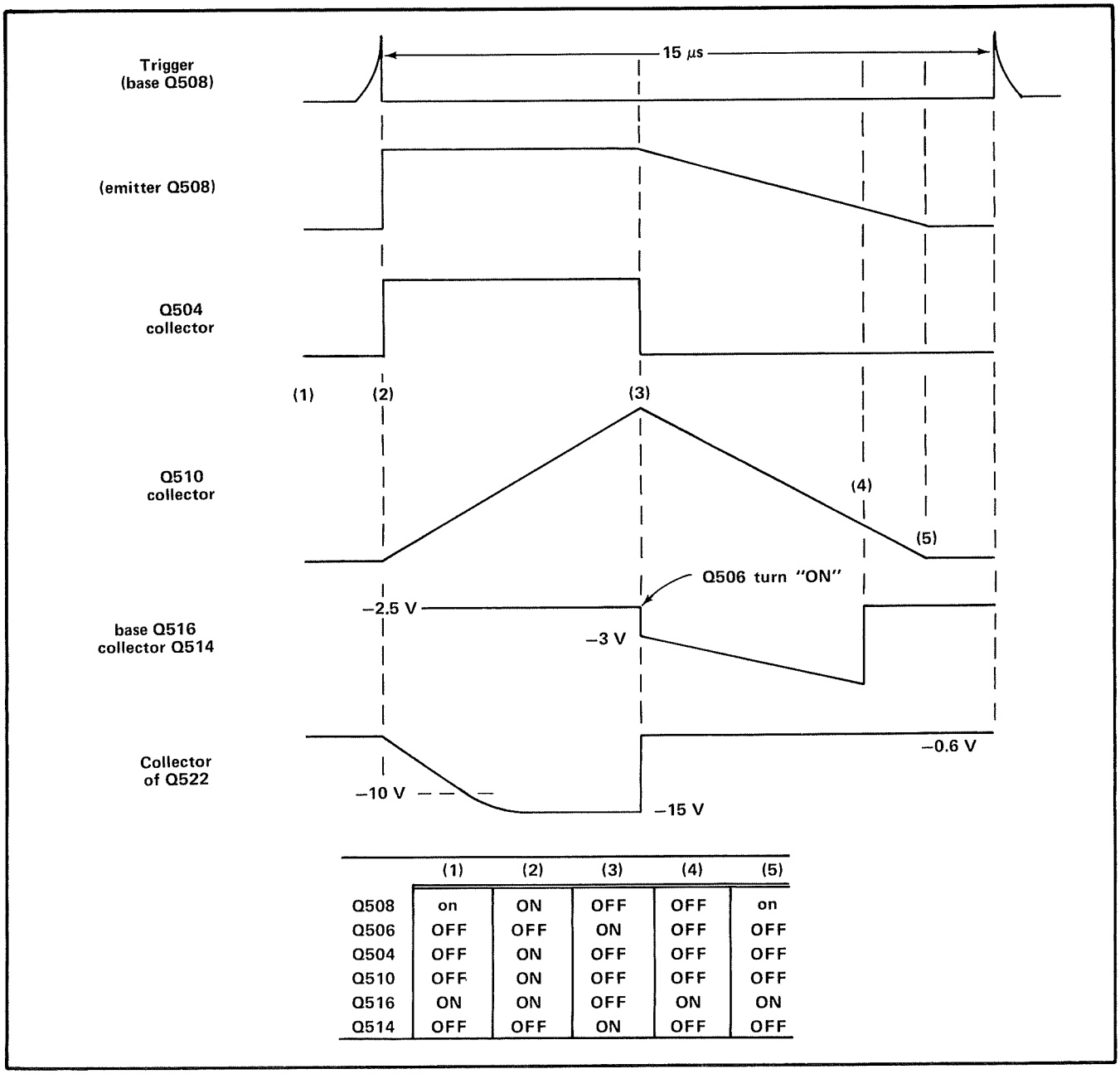

	(1)	(2)	(3)	(4)	(5)
Q508	on	ON	OFF	OFF	on
Q506	OFF	OFF	ON	OFF	OFF
Q504	OFF	ON	OFF	OFF	OFF
Q510	OFF	ON	OFF	OFF	OFF
Q516	ON	ON	OFF	ON	ON
Q514	OFF	OFF	ON	OFF	OFF

Fig. 3-11. Transistor signal waveforms and conduction levels table for the Trigger Circuit and the Trigger Holdoff.

Q508 is "on", Q516 is "ON", and the remaining transistors (Q504, Q506, Q510, and Q514) are "OFF".

Current through Q508, before the trigger arrives, is about 0.33 mA and its emitter voltage is −0.6 volt. This 0.33 mA current also flows through R507 and R504, but insufficient forward bias voltage is provided by the drop across R504 to turn on Q504.

When a trigger is applied to the base of Q508 (time 2 on Fig. 3-11) current through Q508 increases due to the presence of capacitor C508.

The 0.33 mA current through R508 plus the current due to C508 provide sufficient forward bias to turn on Q504. Capacitor C507 speeds up the turn-on of Q504. When Q504 starts conducting, regenerative feedback through C503 causes a rapid increase in current through Q508, and thereby further reduces the turn-on time of Q504. The current of Q504 through R501 and R503 pulls the base of Q508 positive, maintaining the heavy conduction of Q508. Transistor Q504 must be kept turned on long enough to permit the fast ramp to complete its negative-going run.

The additional current through Q508 produced by the input trigger signal and the regenerative feedback of Q504 causes C508 voltage to rapidly rise from −0.6 volt to +0.6 volt. When this voltage reaches approximately +0.6 volt, transistor Q510 is turned on, and it takes over the job of C508 in providing current needed to keep Q504 turned on. Transistor Q504 remains on until its forward bias is shorted by conduction of Q506.

Transistor Q516 emitter current flows through R514. Prior to arrival of the input trigger and the turn-on of Q510 which follows, the collector of Q510 is held at about −15.6 volts by current through CR510 and R510. Diode CR512 protects Q514 from this high reverse bias voltage. Conduction of Q510 causes the voltage at its collector to rise at a rate dependent on the value of hold-off capacitor C511. When the voltage at the collector of Q510 reaches about −3 V (time 3), turn-on forward bias is applied to the base of Q514 through CR512. Saturation current through Q514 results in a drop in voltage at Q514 collector and Q516 base. Transistor Q516 is switched off, Q506 turns on, and Q504 shuts off ending the positive pulse at Q504 collector and resulting in resetting of the fast ramp to zero.

The turn-off of Q504 causes the loss of forward bias to Q508 and Q508 shuts off. Capacitor C508 starts discharging from +0.6 volt toward −0.6 volt. The start of this discharge causes Q510 to shut off and results in hold-off capacitor C511 starting its discharge toward −15 volts.

The collector and emitter of still-saturated Q514 follow the decreasing voltage on the base of Q514. Although Q514 emitter current is decreasing, Q514 collector current is increasing. This results in a decrease in the base current of Q514. When the voltage on the hold-off capacitor decreases to where Q514 base current is unable to maintain saturation current through Q514 (≈−14 V, Time 4), Q514 collector voltage rises. This causes Q516 to switch on and Q514 to switch off. The turn-on of Q516 shuts off Q506.

Capacitors C508 and C511 continue recovery toward their initial voltage of about −0.6 volt and −15.6 volts respectively during the interval between (4) and (5). When C508 reaches −0.6 volt, Q508 again conducts (time 5) and all transistors are back at initial (time 1) conditions.

The circuit can be triggered during the interval between (4) and (5), provided the trigger signal amplitude is sufficient to forward bias Q508. Triggering is not possible, however, prior to the shut-off of Q506 at time (4). Additional capacitance is added to the hold-off when the Multiplier switch is set to the X10 position (C512). This is necessary to provide adequate time for the run of the fast ramp. The increase in hold-off time reduces the maximum triggering rate.

Fast Ramp. In order that the displayed equivalent-time sweep will accurately represent the selected TIME/DIV setting, the rate of change of the Fast Ramp must be correct.

Transistors Q518, Q520, and Q522 are considered to be part of the Fast Ramp circuit. The ramp slope depends on the value of timing current and timing capacitance.

With the Multiplier switch set at is X.1 position, a timing capacitance of about 100 pF is provided by stray circuit capacitance plus that of variable capacitor C535, and fixed capacitor C520.

The −15 volts on the base of Q522 together with the −50 volt supply provide approximately 35 volts across emitter resistors R524 and R525. Resistor R525 is a calibration adjustment used to set the timing capacitor current to about 5 mA.

Before arrival of a trigger signal, the top of the timing capacitor is held at a potential of −0.6 volt by conduction of Q520. The trigger signal results in a positive pulse at the collector of Q504 which turns on Q518. When Q518 conducts, Q520 is shut off and the timing current causes the voltage at the timing capacitor to run down from −0.6 volt toward the −15 volt potential on the base of Q522.

Since the timing current remains constant for more than 10 volts of this run, and only 10 volts of this ramp is needed, the circuit provides the required linear ramp of the proper slope and amplitude.

The timing capacitor is returned to its initial −0.6 volt level when the positive pulse at the collector of Q504 ends. The timing capacitor is quickly discharged through Q520, and Q520 carries the 5 mA timing current until the next trigger occurs.

Strobe Driver Comparator. Transistors Q538, Q540, and Q542 are part of the Strobe Driver Comparator. The function of this comparator is to supply outputs to the Interdot Blanking and Strobe Driver circuits. The Strobe Driver Comparator will deliver an output when the Fast Ramp runs down to the level of the Slow Ramp Inverter output.

The Fast Ramp starts its negative run from a starting potential of about −0.6 volt. Therefore, just prior to the start of the fast ramp, the potential at the base of Q538 is −0.6 volt. Since the output of the Slow Ramp Inverter runs negative from a starting level of about −1.5 volts, the base of Q540 will be at least 1.5 volts negative. Transistor Q538 will be conducting and Q540 shut off until the fast ramp output is more negative than the Slow Ramp Inverter output.

When Q538 shuts off a signal is delivered through Q542 to the interdot blanking circuit. Simultaneously the turning on of Q540 provides a signal to the Strobe Generator.

Interdot Blanking. Prior to the start of the fast ramp, Q538 is carrying a current of about 3 mA and Q540 is shut off. Approximately 1 mA of this current is Q542 base current and 2 mA is Q542 collector current. The voltage at the collector of Q542 and the left side of C543 is near zero while the right side of C543 is held at −0.6 volt by conduction of Q930 base in the Pulser Baseline Correction circuit. Conduction through Q930 and R545 is about 0.5 mA.

When the Fast Ramp voltage at Q538 base runs below Q540 base voltage, Q538 shuts off. The collector of Q542 (also the left side of C543) attempts to go to +15 volts. Both sides of C543 jump positive 1.2 volts before conduction of Q546 emitter clamps the right side of C543 at +0.6 volt. The turn-on of Q546 produces a positive-going interdot blanking pulse at Q546 collector.

The duration of Q546 conduction, and therefore the blanking pulse duration, is dependent on the time required for the voltage at the left side of C543 to rise from +1.2 volts to +5.6 volts. The capacitor charging current is dependent on the difference in potential across R543 and is (15 volts - 1.2 volts/7.5 kΩ) about 2 mA initially. About 0.5 mA of this current is through R545 and the remainder is Q546 emitter current. When the left side of C543 reaches +5.6 volts, CR543 conducts. Conduction of CR543 switches off Q546 emitter current, and Q546 stops conducting, ending the interdot blanking pulse. The duration of this pulse is about 3 μs. When the Fast Ramp resets to its −0.6 volt level, Q538 again conducts, Q540 is shut off, and the comparator awaits the next rundown of the Fast Ramp.

Strobe Driver. Transistors Q552, Q556, Q566, and Q568 are part of the Strobe Driver. Before Q540 of the Strobe Driver Comparator turns on, Q552 current is about .25 mA, and Q556, Q566, and Q568 are non-conducting.

The voltage divider consisting of R560, R562, and R564 provides about +5 volts for the base of Q566 and Q568, and approximately +10 volts for the base of Q552. Since the emitter of Q552 is near +11 volts, diode CR554 is reverse biased.

When Strobe Driver Comparator transistor Q540 switches on, transistor Q552 current increases. The additional Q552 current is supplied initially by C554. After C554 discharges slightly, diode CR554 is forward biased and provides the path for current requirements in excess of the approximately .25 mA flowing through R554.

Transistors Q552 and Q556 form a regenerative circuit. When current through Q552 increases, its collector is pulled up. This positive-going signal is coupled through C552 to the base of Q556. Conduction of Q556 turns on Q552 harder, which turns on Q556 harder.

Transistor Q556 is rapidly turned on hard by a short duration positive-going pulse. This results in a large short duration current pulse through Q566 and Q568, and a positive pulse is developed at the collector of these transistors. The output of Q566 is applied to the Memory Gate Driver. The output of Q568 is available for use by an adjacent 7S11 (if used).

Pulser Driver Comparator. Operation of the Pulser Driver Comparator is essentially the same as that of the Strobe Driver Comparator. High beta transistors are used in both of these comparators to minimize the effect of comparator base current change on Fast Ramp linearity. Diodes in the emitter circuits prevent exceeding the base-emitter reverse voltage limitations of the transistors.

The output of the Fast Ramp is applied to the base of Q532 and a negative DC voltage is applied to the base of Q534. For further information on this refer to Fig. 3-4 and the discussion earlier in this section, under the heading of Pulser Driver Comparator and Pulser Driver.

Prior to rundown of the Fast Ramp, Q532 is conducting and Q534 is cut off. When the output voltage of the Fast Ramp goes below that on the base of Q534, transistor Q532 shuts off and Q534 conducts. The conduction of Q534 provides an input to the Pulser Driver circuit.

Pulser Driver. Transistors Q576, Q574, and Q580 are used in the Pulser Driver. Before Q534 conducts, transistor Q576 current is about 0.33 mA and Q574 and Q580 are shut off. This 0.33 mA current through R580 does not provide enough forward bias to cause conduction of Q574.

When Q534 conducts, this current turns Q576 on hard. Transistor Q576 current increases, which causes the drop across R580 to increase. Transistor Q574 conducts and couples a large-amplitude signal through C575 to the base of Q580. Since R575 and C575 form a short RC time, transistor Q580 is rapidly turned on, and then off. This results in a fast-rise positive-going spike at the collector of Q580. This output serves as a drive signal to the snap-off diode in the pulse generator head.

Slow Ramp and Horizontal Driver ◇6◇

+10 Volt Reference and External Driver. The +10 volt reference uses the "A" section of U650. This IC contains four separate operational amplifiers. Refer to Fig. 3-5 and diagram 6 during the following discussion.

Input current to U650A is provided by Q682. The current is dependent on the voltage supplied by the regulated −15 volt and −50 volt supplies of the oscilloscope. This current is about 2 mA and results in an output from U650A of approximately +10 volts.

The output of the +10 Volt Reference is applied to the Scan Control, except when EXT INPUT mode is selected. With EXT INPUT selected, the signal fed to the Ext Input connector (J601) is applied across the Scan control. The voltage at the movable contact of the Scan control is applied as input to External Driver U620A. Diodes VR604 and CR604 prevent application of excessive positive voltage to the input of U620A, and diode CR606 prevents excessive negative voltage. The output from pin 9 of U620A is always applied to the input of the Scan Amplifier, and is applied to the input of the Horizontal Driver when Ext Input or Manual (MAN) mode is selected. The Scan Amplifier is utilized during the repetitive (REP) and single sweep (SINGLE) modes of operation but serves no useful function when Ext Input or Manual mode is selected.

Horizontal Driver. The Horizontal Driver consists of U650C, U650D, Q650, and associated components. Two front-panel screwdriver adjustments (SWEEP CAL and HORIZ POS) are located at the output of the push-pull Horizontal Driver. During the EXT INPUT or MAN modes of operation, the output of the External Amplifier is applied directly to the input of the Horizontal Driver (pin 13 of U650C) via transistor Q640. The bias normally applied to Q640 causes this transistor to act as a closed switch. With MAN selected and the SCAN control set to midposition, about +5 volts appear at the input and output of U620A. Since Q640 normally acts as a closed switch +5 volts also appear at the source of Q640. Offset current through R644 results in the voltage level being shifted 5 volts negative at the input (pin 13) of U650C.

Rotating the SCAN control from fully CCW to fully CW results in the voltage at the input of U650C changing from −5 volts to +5 volts. This same change (from −5 volts to +5 volts) also appears at the output (pin 15) of U650C. The output of the other half of the push-pull stage (collector of Q650) is inverted. The output of the Horizontal Driver supplies horizontal deflection voltage to the oscilloscope CRT.

Two other sources of input for the Horizontal Driver are available: an input signal may be applied through pin 1 of P18 (connects to pin 12 of fixed shoe J641) or the output of the Slow Ramp Generator can be used. The source of the signal at pin 12 of the shoe (J641) can be an auxiliary device located in the oscilloscope compartment to the left of the 7S12. When an input signal is applied via the fixed shoe, a disabling voltage is also delivered to the gate of Q640. This voltage is applied from pin 10 of the shoe to pin 2 of P18, and thence to pin P of J3. The disabling voltage opens Q640 and prevents the drain voltage of Q640 from appearing at the Horizontal Driver input (pin 13 of U650).

It should be noted that any voltage appearing at the source of Q640, whether delivered through Q640 or from the fixed shoe (J641), appears at the Horizontal Driver input, SWEEP OUT connector J640, and at pin 14 of J3.

Slow Ramp Generator. When REP or SINGLE mode is selected (schematic 6 shows REP selected) the output of the Slow Ramp Generator supplies the input to pin 13 of U650C. Runup of the Slow Ramp Generator is now possible, since shorting resistor R621 is removed.

The time required for the Slow Ramp Generator to run up from approximately 0 volts to about +11 volts is

dependent on input current delivered to pin 14 of U620B. With the SCAN control fully CW, about +10 volts is applied to pin 11 of U620A. The +10 volt output of U620A is applied to the Scan Amplifier input, and approximately −10 volts appear at the collector of Q610. This provides maximum input current to (pin 14 of U620B) the Slow Ramp Generator, and the maximum rate of rise in output voltage results. As the SCAN control is turned CCW, the rate of rise decreases and a longer time is required for the approximate 11 volt runup. A calibration adjustment (Scan Rate R618) is provided to ensure that input current does not decrease to zero as the SCAN control is rotated toward its fully CCW position. With the SCAN fully CCW a small current is provided to the input circuit of the Slow Ramp Generator through R617. The value of this current is adjusted using R618 to supply circuit leakage currents plus enough charging current for C620 to meet minimum scan rate specifications.

Hold-off, Reset, Blanking, and Sweep Lockout. Transistor Q636 is used for retrace blanking, and Q624, Q626, and Q620 for hold-off and reset of the Slow Ramp Generator. While the Slow Ramp Generator output is running up, Q620 and Q626 are off and Q624 and Q636 are on. Capacitor C624 is rapidly charged by emitter-base current of Q624 as the capacitor voltage follows the base of Q624. When the output voltage of the Slow Ramp Generator exceeds C624 voltage, the capacitor voltage follows the rising output of the Slow Ramp Generator due to conduction of CR620. When the Slow Ramp Generator output reaches about +11 volts, the charge on capacitor C624 is approximately +10 volts.

With a base voltage of +10 volts, Q624 current is reduced to a value that is insufficient to keep Q626 shut off. When Q626 starts conducting the multivibrator switches; Q624 is turned off and Q626 is turned on.

The turn-on of Q626 pulls the base of Q636 positive, and the turn-off of Q636 causes retrace blanking. The turn-on of Q626 also pulls the gate of Q620 up. Conduction of Q620 shorts out the Slow Ramp Generator feedback capacitor (C620) and ends the runup of the Slow Ramp Generator.

Since the Slow Ramp Generator output voltage has returned to zero, hold-off capacitor C624 is no longer charging through diode CR620. Capacitor C624 now discharges toward −50 volts through R628, but is prevented from going below zero volts by diode CR631. When the hold-off capacitor voltage reaches approximately +5 volts, the hold-off multivibrator again switches. Transistor Q624 is turned on, Q620 and Q626 are turned off. Retrace blanking ends with Q636 turn-on and another run-up of the Slow Ramp Generator begins.

With High Resolution selected, the hold-off time is increased by paralleling hold-off capacitor C624 with C628.

As previously mentioned, if a negative disabling voltage is applied through R638 by an auxiliary device, Q640 opens. This negative voltage also disables retrace blanking. Normally, retrace blanking occurs when Q626 turns on and pulls the base of Q636 positive. The negative voltage applied through the network consisting of R638, R637, and diode CR637 prevents conduction of Q626 from turning off Q636. Q614 is driven by the Scan Amplifier. Q614 drives Q624 to provide a variable hold-off period. The hold-off period is increased when the display period is increased.

Sweep Lockout Q645 holds off the Slow Ramp Generator signal to Q624 base when the storage oscilloscope has a stored display.

Single Sweep Blanking, Q634 and Q638, is turned on by U620D when the slow ramp exceeds 10 V. Q638 emitter signal provides a sharp edged pulse to Retrace Blanking Q636 when the Slow Ramp Generator is running at a slow display rate.

Time/Distance, Locate, and Slow Ramp Inverter ⑦

Since these circuits were discussed earlier in this section (Theory of Operation) no explanation will be given here.

Timing Switches and Horizontal Readout Logic ⑧

The components and switches shown on the lower half of schematic ⑧ provide the column and row currents required for Auto Scale Factor Readout on the CRT. Since selection of symbols was discussed for schematic ④ (VERTICAL READOUT LOGIC), refer to the discussion of schematic ④ if the functioning of Horizontal Readout is not understood.

The TIME/DISTANCE switch (S530B) and TIME/DIV switch (S530A) are cam-type switches operated by front panel controls. Contact numbers of the switches are shown, and the switch position at which contacts are closed is indicated by dots on schematic diagram ⑧. For example, contact 1 of switch S530B is closed when the multiplier indicates X10, contact 2 at X1, and contact 3 at the X.1 position.

Contacts 9 through 16 of the TIME/DIV switch (S530A) determine attenuation of the Slow Ramp, and therefore the apparent magnification of the Fast Ramp. Contacts 17 through 21 of the TIME/DIV switch select the proper locate resistor for the intensification circuit.

Vertical Power Distribution and Decoupling ◇9◇

This diagram shows that +50 V, +15 V, +5 V, −15 V and −50 V is delivered to the Left Interface Board of the 7S12 from the oscilloscope. These voltages enter the 7S12 via the A and B sides of the Vertical Output Connector at the rear of the plug-in.

Since −12.2 V is required at both sampling head compartments, a regulated source of this voltage is provided in the 7S12. The "A" side of comparator Q824 is provided with a reference voltage by the −15 volt supply and R821 and R822. The series resistance of Q826 is controlled by output at the collector of the "B" section of the comparator so that −12.2 V is maintained across the load. The −12.2 volts is delivered to the sampling head in the vertical side of the 7S12 via pin A of J120, and to the sampling head in the horizontal side via pin A of J520.

Pulser Baseline Correction Circuit ◇15◇

The Slow Scan Hold-off ramp from the Hold-off Reset circuit is applied to the minus input of the Correction Period Generator U910. The beginning edge (fast rise component) of the hold-off period is coupled through C914 to switch the U910 output to −12 V. The U910 plus input is biased to the voltage at the junction of R910 and R911. The correction period ends when the negative going Hold-off ramp from Q624 base causes U910 output to switch to +12 V. The U910 negative output level biases Q930 in the Correction Gate Driver so that interdot blanking signals from Q546 through the Correction Gate Driver, Q930 and Q932, drive the Correction Memory Gate.

The Correction Memory Gate Q936 couples the Vertical Sampling Loop Memory signal to the Correction Memory. The Correction Memory is an operational integrator composed of differential comparator Q940 and operational amplifier U940 with feedback capacitors C952 and C953. The second gate of Q940 receives the Memory Balance voltage from R945. The Correction Memory is disabled when Q954 is turned on by the Pulse Generator Head and Switch S901 Position Sensor circuit.

The Summing Amplifier minus input receives the correction signal from U940 output. The plus input receives the DC offset voltage, which is controlled at the front panel, via the Offset Gate. The Offset Gate disables the DC offset voltage during the Correction Memory period. The DC offset voltage and the Correction Memory voltage are summed during the display period. The Summing Amplifier output is the corrected offset voltage that is applied to the Sampling Head.

The Pulse Generator Head and Switch S901 Position Sensor is composed of Q903 and Q906. The Pulse Generator Head inhibit voltage at J520 pin 5 is applied to Q903 base. With switch S901 in the Normal position, a low positive level from the Pulse Generator Head turns off Q903, Q906 and Q954 and the Pulser Baseline Correction circuit is enabled. Switch S901 in the Off position forward biases Q903 to turn the Pulser Baseline Correction circuit off. Switch S901 in the On position disables Q903, Q906 and Q954. The Pulser Baseline Correction circuit is also disabled by Q914 when an external chart recorder is installed in the left-hand vertical compartment of the oscilloscope.

Q922 in the Inverter Output Control forces all sampling strobes to occur before the Pulser is triggered by the Pulser Comparator. Thus, during the correction memory period all Pulser Baseline correction samples are taken on the arming level of the Pulser. This occurs when Q922 is turned on by the Correction Period Generator. When Q922 is turned off and Q925 is turned on by the Correction Period Generator, Q925 gates the Slow Scan ramp to the Strobe Driver comparator.

SECTION 4
MAINTENANCE

Introduction

This section of the manual contains maintenance information for use in preventive maintenance, corrective maintenance or troubleshooting of these instruments.

Preventive maintenance consists of cleaning, visual inspection, lubrication, etc. Regular preventive maintenance may prevent instrument breakdown and improves instrument reliability. Perform preventive maintenance as often as necessary.

The instrument covers protect against dust in the interior. Leave panels in place except when working on the instrument.

CAUTION

Avoid the use of chemical cleaning agents which might damage the plastics used in these instruments. Avoid chemicals which contain benzene, toluene, zylene, acetone or similar solvents.

Exterior. Remove loose dust on the outside of the instruments with a soft cloth or small paint brush. Use the paint brush to dislodge dirt on and around the front. Remove the remaining dirt with a soft cloth dampened in a mild detergent and water solution. Do not use abrasive cleaners.

Interior. Keep the interior of the instrument free of dust, since a heavy dust layer combined with high-humidity conditions can cause failure. Clean the interior by blowing off the accumulated dust with dry, low-pressure air. Remove any remaining dirt with a soft paint brush or a cloth dampened with a mild detergent and water solution. Use a cotton-tipped applicator to clean circuit boards.

Lubrication

Proper lubrication increases the reliability of potentiometers, switches and other moving parts. Do not use too much lubrication. A lubrication kit containing the necessary lubricants and instructions is available from Tektronix, Inc. Order Tektronix Part No. 003-0342-02.

Troubleshooting

To perform troubleshooting, the 7S12 must be connected to the oscilloscope by two Flexible Plug-in Extenders (Tektronix Part No. 067-0572-01). A Sampling Head and a Pulse Generator Head must be installed. A coaxial cable must be connected from the Pulse Generator Head output connector to the Sampling Head input connector. The two plug-in cards may be removed from the top of the 7S12 and separated by removing the screws that hold them together. Either card may be mounted on a Plug-in Extender (Tektronix Part No. 018-0064-00) to gain access to the circuit. The following instructions are intended to aid in troubleshooting the more complex circuits; therefore, not all circuits are discussed.

Horizontal Circuits. If the trace is not visible, check the +10 V Supply, External Driver, Scan Amplifier and Slow Ramp circuit. Push the MAN Scan switch and measure the voltage at the SWEEP OUT jack with an oscilloscope. The voltage varies from 0 to 10 V DC when the Scan control is turned from the fully counterclockwise position to the fully clockwise position.

Check the Hold-off and Reset circuit. Turn the SCAN control fully clockwise and push the REP switch. Check for a 0 to 10 V Slow Ramp at the SWEEP OUT jack. Push the SINGLE sweep switch and check that the dot is at the right side of the CRT. This checks that the Slow Ramp runs up. Push the START switch and check for a sweep of the trace. This checks the Reset circuit.

Check the Horizontal Driver. Observe the waveform at TP (test point) 650 and 658 for equal amplitude ramps (one is inverted) of about 9 V.

Vertical Circuits. If there is no signal at the VERT SIG OUT jack, and the Memory Gate Drive signal is correct at TP394, make the following set up and checks. Set the 7S12 mV/DIV switch at 2 mV and the DC OFFSET control fully clockwise. Check the Post Amplifier input TP121, its output TP139 and the AC Amplifier output TP218 for an error signal in the form of a trace with spikes which reduce to zero and then invert when the DC OFFSET control is turned to its fully counterclockwise position. The Memory voltage changes from +12 V to −12 V when the DC OFFSET control is turned throughout its range.

If the correct signal appears at the VERT SIG OUT jack, but not on the CRT, observe the waveform at TP314, TP344, and TP354. If correct signals exist at these points, the trouble is probably in the oscilloscope.

Tape Dial Removal

1. Turn off the oscilloscope power.

2. Turn the tape dial (using the TIME-DISTANCE control) to .50 μs.

3. Using a sharp instrument (small screwdriver, etc.), remove both retaining rings from the posts. See Fig. 4-1.

4. Lift the flat washers and retaining plate from the posts.

5. Carefully lift the tape and sleeve bearings (spools) from the two posts.

6. Unroll and remove the tape from each sleeve bearing. If the tape is to be re-used, avoid kinking it.

Tape Dial Installation

1. Install the new tape on the sleeve bearings. Take care not to kink the tape.

2. Be sure that .50 μs is visible when the face of the tape is observed. This ensures that the amount of tape on each sleeve bearing is roughly equal, making installation easier.

3. Slide the tape and sleeve bearings over the posts, making sure that the serrated side is down. Take care not to scrape the tape face on the 7S12 frame. When the tape is installed, the hairline should be on or near .50 μs.

4. Re-install the retaining plate, flat washers, and retaining rings on the assembly.

Tape Dial Alignment

1. Turn the TIME-DISTANCE control clockwise until resistance is encountered.

2. Using an .050 Allen wrench, loosen the setscrew shown in Fig. 4-1.

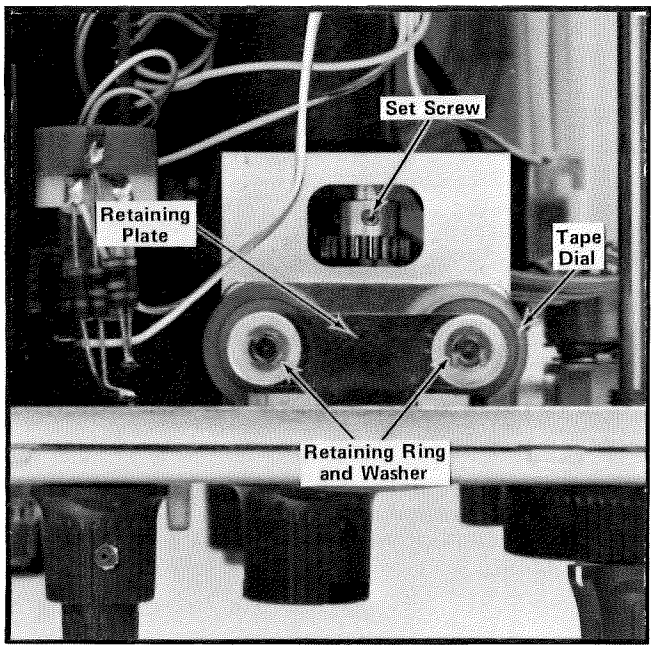

Fig. 4-1. Component locations for tape dial replacement or adjustment.

3. Place the TIME-DISTANCE tape dial zero at the hairline.

4. Tighten the setscrew and check the adjustment. When the TIME-DISTANCE control is turned fully clockwise, the hairline should be at zero on the tape dial.

Readout Symbol Adjustment(> & <)

Since the mV (or mρ) VARIABLE knob changes the deflection amplitude to greater than or less than the calibrated position, a switch on the shaft changes the symbol on the CRT of the oscilloscope containing a readout. A check and adjustment of this switch in relation to the rotation of the VARIABLE control follows.

1. Obtain a step display, including the Readout on the CRT.

2. Record the amplitude of the display with the VARIABLE control in the CAL IN position.

3. Press the VARIABLE control to release to the out (uncalibrated) position. Adjust the VARIABLE control for the same amplitude as recorded in part 2. If the control is at the point where the readout symbols change, no adjustment is necessary. If the symbols do not change at this point, do the remaining adjustment steps.

4. Use a .050 Allen wrench to loosen the setscrew; see Fig. 4-2.

5. With the setscrew loose, the switch activator containing the setscrew is free to move along the shaft and rotate. (Be sure the VARIABLE control is set as in part 3.) Move the Switch Activator toward the front of the instrument until the end of the flat shaft touches the switch rotor; then move the assembly back about 1/32 inch to relieve the strain on the switch rotor.

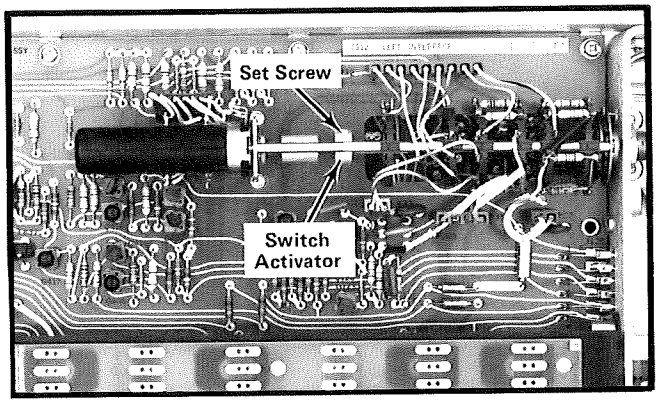

Fig. 4-2. Readout adjustment location, instrument left side.

6. Rotate the Switch Activator (rotates the switch) to a point where the Readout symbols (> & <) change. Then tighten the setscrew with the Allen wrench.

Repackaging for Shipment

If the Tektronix instrument is to be shipped to a Tektronix Service Center for service or repair, attach a tag showing: owner (with address) and the name of an individual at your firm that can be contacted, complete instrument serial number and a description of the service required.

Save and re-use the package in which your instrument was shipped. If the original packaging is unfit for use or not available, repackage the instrument as follows:

Surround the instrument with polyethylene sheeting to protect the finish of the instrument. Obtain a carton of corrugated cardboard of the correct carton strength and having inside dimensions of no less than six inches more than the instrument dimensions. Cushion the instrument by tightly packing three inches of dunnage or urethane foam between carton and instrument, on all sides. Seal carton with shipping tape or industrial stapler.

The carton test strength for your instrument is 200 pounds.

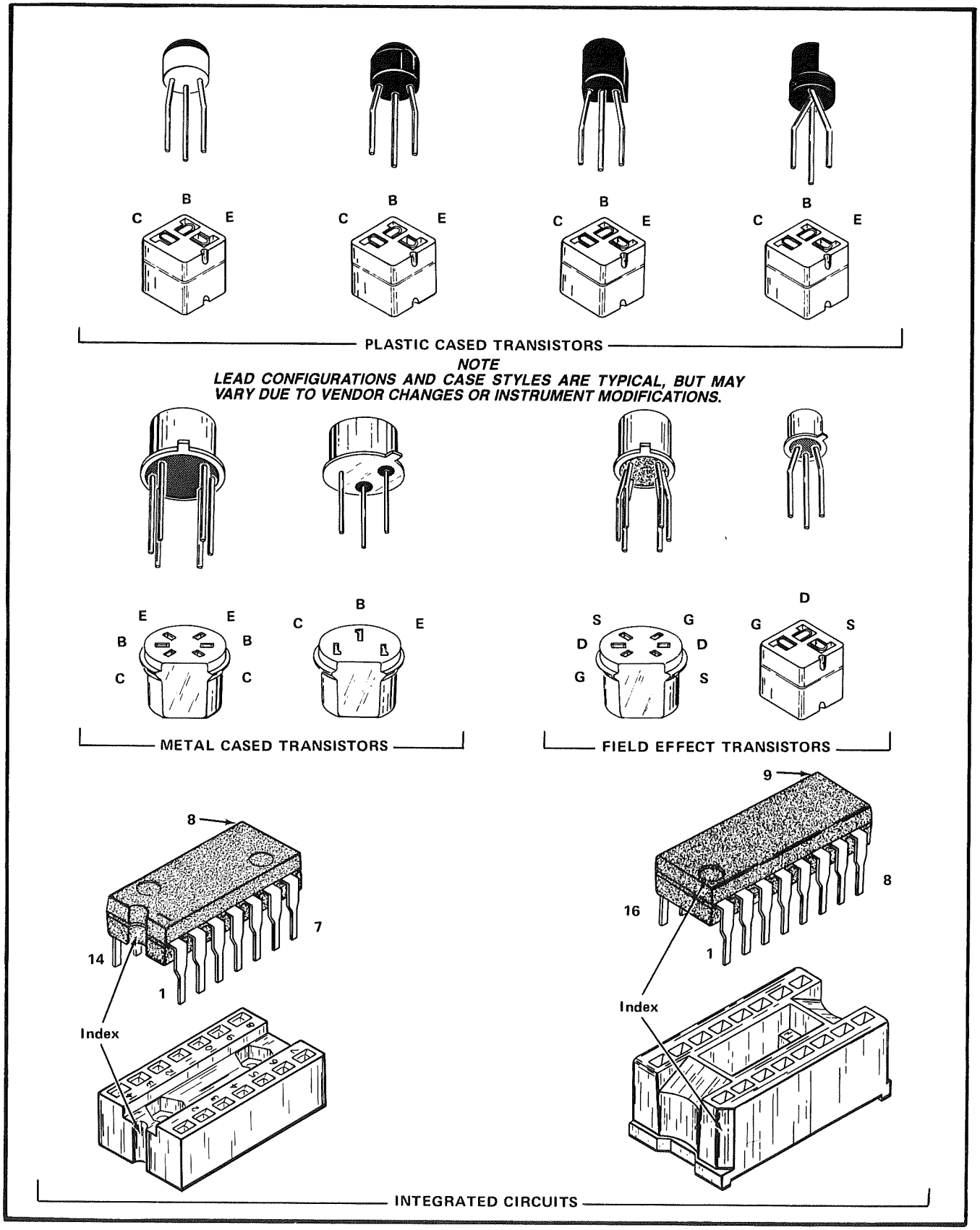

Fig. 4-3. Lead configuration of transistors and integrated circuits.

SECTION 5
PERFORMANCE CHECK / ADJUSTMENT

Introduction

This section of the manual contains the Performance Check and the Adjustment Procedure for the 7S12 TDR Sampling Unit. The Performance Check verifies that the instrument meets the Section 1 Specifications. The Adjustment Procedure restores the performance of the instrument to the Section 1 Specifications.

The 7S12 TDR Sampling Unit controls are indicated in CAPITAL letters and the test equipment controls are indicated in initial Capitals.

NOTE

All waveforms shown in this procedure were taken with a Tektronix Oscilloscope Camera System. Limits, tolerances and waveforms in this procedure are given as calibration guides and should not be interpreted as instrument specifications, except as specified in Section 1.

Equipment Required

The following test equipment and accessories, or equivalent, are required for the complete performance check and adjustment of the 7S12 TDR Sampling Unit. Specifications given are the minimum necessary for accurate checks and adjustments; therefore, some of the recommended equipment may have specifications that exceed those given. All test equipment is assumed to be correctly calibrated and operating within the given specifications. If equipment is substituted, it must meet or exceed the specifications of the recommended equipment.

Special Tektronix Calibration fixtures are used in this procedure only where they facilitate the checks and adjustments. The special calibration fixtures are available from Tektronix, Inc. Order by part number through your local Tektronix Field Office or representative.

Test Equipment

1. Oscilloscope. Tektronix 7704A or other 7000—Series Oscilloscopes in which the 7S12 is used.

2. Vertical Amplifier. Tektronix 7A16A Amplifier with a P6106A (Tektronix Part No. 010-6106-11) or other 10X probe.

3. Delay Line. Tektronix 7M11 50 Ω Delay Line which has a 75 ns signal delay.

4. Calibrator. 50 Ω Amplitude Calibrator, Tektronix Calibration Fixture 067-0508-00. The signal amplitude requirements are 12 mV and multiples through 600 mV, within 0.25%.

5. Time-Mark Generator. The marker requirements are 1 μs with submultiples through 2 ns periods, within 0.3%. The trigger output requirement is 10 μs period triggers or the trigger output is slaved to the marker output. Tektronix TG 501 Time-Mark Generator recommended. (If a TG 501 is used, a TM 500-series power module is required.)

6. Sampling Head and Pulse Generator. Tektronix Type S-5 Sampling Head and S-54 Pulse Generator Head or Type S-6 Sampling Head and S-52 Pulse Generator Head, or both pairs.

7. Trigger Recognizer. Tektronix S-53 Trigger Recognizer.

8. Normalizer Head. Tektronix Calibration Fixture 067-0572-01. This item is not required if the 7S12 is limited to one or two sampling heads.

9. Flexible Plug-in Extension. Tektronix Part No. 067-0616-00.

10. Cable. 50 Ω, approximately 8-inch length of coaxial cable with BNC connectors. Tektronix Part No. 012-0118-00. It is supplied with and is required only for the S-54 Pulse Generator Head.

11. Cable. 50 Ω coaxial cable, 42-inch length with BNC connectors. Tektronix Part No. 012-0057-01. Two required.

12. Cable. 50 Ω coaxial cable, 5 ns signal delay, Type RG213/U with GR connectors. Tektronix Part No. 017-0502-00.

13. Cable. 50 Ω coaxial cable, 10-inch length with a BSM female and a BNC male connector. Tektronix Part No. 012-0128-00.

14. Coaxial Line. 50 Ω, 1 ns signal delay with 3-mm male connectors. Tektronix Part No. 015-1023-00. It is supplied with, and is required only for the S-52 Pulse Generator Head.

15. Coaxial Line. 50 Ω, 750 ps signal delay, U-shape with 3-mm male connectors. Tektronix Part No. 015-1017-01. It is supplied with the 7S12.

16. Adapter. GR to BNC female connector. Tektronix Part No. 017-0063-00.

17. Adapter. 3-mm female to female connector. Tektronix Part No. 015-1012-00. It is supplied with and is required only for the Type S-6 Sampling Head.

18. Adapter. BNC female to 3-mm male. Tektronix Part No. 015-1018-00.

19. Adapter. GR to 3-mm male. Tektronix Part No. 015-1007-00. It is supplied with and required only for the Type S-6 Sampling Head.

20. Adapter. BNC "T" female to male to female connector. Tektronix Part No. 103-0030-00. It is supplied with and is required only for the S-54 Pulse Generator Head.

21. Termination. 50 Ω feedthrough with BNC connectors. Tektronix Part No. 011-0049-01. It is supplied with and is required only for the Type S-5 Sampling Head.

22. Termination. 50 Ω with 3-mm male connector. Tektronix Part No. 015-1022-00. It is supplied with and is required only for the Type S-6 Sampling Head.

23. Termination. 50 Ω with GR connector. Tektronix Part No. 017-0081-00.

24. Termination. Short-circuit with 3-mm female connector. Tektronix Part No. 015-1021-00. It is supplied with the 7S12.

25. Time Base, Tektronix 7B80.

PERFORMANCE CHECK AND ADJUSTMENT RECORD AND INDEX

The following abridged procedure may be used as a guide by the experienced technician for checking the performance of the 7S12. The abridged procedure may be used as a maintenance record (the procedure may be reproduced without special permission of Tektronix, Inc). The step numbers and titles are identical to those in the complete procedure.

7S12, Serial No. _____

Calibration Date _____

Calibrated By _____

Checked By _____

7S12 Checks

1. Preliminary Procedure — Page 5-3
2. Check Vertical Deflection Factors — Page 5-4
3. Check TIME/DIV Accuracy — Page 5-4
4. Check TIME-DISTANCE Dial Accuracy — Page 5-4
5. Check DC OFFSET Range — Page 5-5

S-6, S-52 and 7S12 System Checks

1. Check Pulse Amplitude — Page 5-5
2. Check Pulse Jitter — Page 5-6
3. Check Pulse Aberrations — Page 5-6
4. Check Pulse Risetime — Page 5-6

S-5, S-54 and 7S12 System Checks

1. Check Pulse Amplitude — Page 5-7
2. Check Pulse Jitter — Page 5-8
3. Check Pulse Aberrations — Page 5-8
4. Check Pulse Risetime — Page 5-8

Adjustment Procedure

1. Preliminary Procedure — Page 5-9
2. Adjust Memory Gate Width Control R390 and Memory Gain Control C275 Using Normalizer Head — Page 5-9

2. (Alternate) Adjust Memory Gate Width Control R390 and Memory Gain Control C275 Using Sampling Head — Page 5-9

3. Adjust Memory Balance Control R245, Variable Balance Control R335 and Vertical Position Balance Control R325 — Page 5-11

4. Adjust Delay Calibrate Control R380 — Page 5-11

5. Adjust VERT GAIN Control — Page 5-12

6. Adjust HORIZ POS and SWEEP CAL Controls — Page 5-13

7. Adjust Timing Controls R525 and C535 — Page 5-13

8. Adjust TIME-DISTANCE Calibration Control R668 — Page 5-13

9. Adjust Pulse Position Controls R590, R592 and R594 — Page 5-14

10. Adjust Scan Rate Control R618 — Page 5-14

11. Adjust LOCATE Calibration Control R677 — Page 5-14

12. Adjust Correction Memory Control R945 — Page 5-15

7S12 CHECKS

1. Preliminary Procedure

a. Install the 7S12 in the center two compartments of a 7704A Oscilloscope.

b. Install an S-6 Sampling Head in the 7S12 Sampling (left) compartment and an S-53 Trigger Recognizer in the Pulse Generator (right) compartment.

c. Switch the power on to the oscilloscope, the time-mark generator and the 50 Ω Amplitude Calibrator.

d. Connect a 3-mm male 50 Ω termination to the upper input connector to the S-6 Sampling Head.

e. Connect a BNC coaxial cable from the 50 Ω Amplitude Calibrator Trigger Output connector to the Trigger Recognizer Input connector.

f. Turn the Trigger Recognizer Stability and Level controls fully clockwise.

g. Push the Oscilloscope Right Vertical Mode switch, the Right Vert Trigger Source switch and the A Horizontal Mode switch.

h. Set the 7S12 controls:

mV	on
mV/DIV	100
PRESET	off
HI RESOLUTION	off
REP	on
SCAN	fully clockwise
DC OFFSET	center trace
TIME-DISTANCE Multiplier	X10
TIME/DIV	1 μs
TIME-DISTANCE Dial	0

i. Push the MAN switch after obtaining the trace.

j. Check that the dot range of movement is from graticule vertical line 0 (left edge) to graticule vertical line 10 (right edge) when the SCAN control is turned from the fully counterclockwise position to the fully clockwise position. Adjust the HORIZ POS and SWEEP CAL (screwdriver adjust) controls as necessary to obtain this performance. The SWEEP CAL control sets the distance the dot moves. The HORIZ POS control positions the range of dot movement of the graticule. See Fig. 5-1 for this display.

k. Push the 7S12 REP switch and turn the SCAN control fully clockwise.

l. Connect a GR coaxial cable from the 50 Ω Amplitude Calibrator Output connector to the Sampling Head lower input connector with a GR to 3-mm male adapter.

m. Set the 50 Ω Amplitude Calibrator signal amplitude at .6 V and the DC-Square wave switch at Square wave.

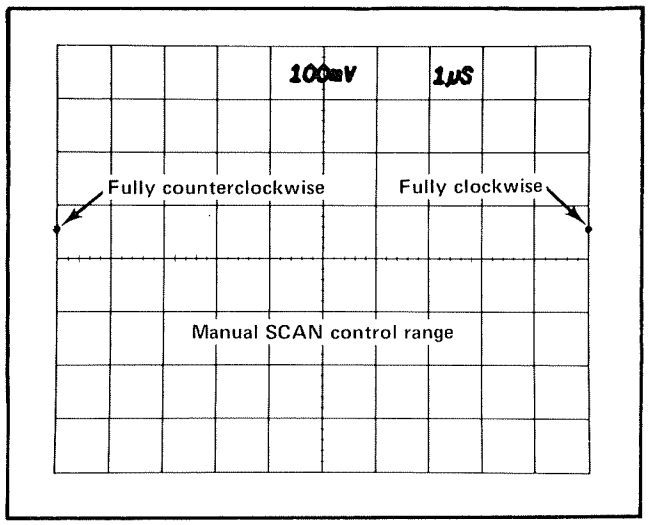

Fig. 5-1. The correct dot range of movement for Manual SCAN control operation.

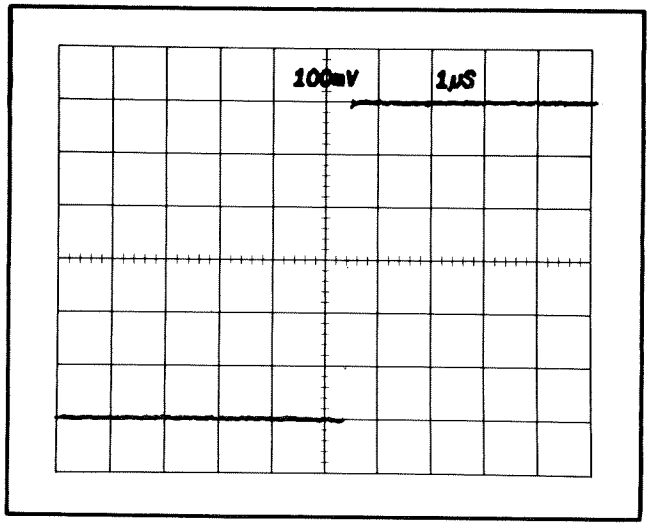

Fig. 5-2. VERT GAIN control adjustment. Only a portion of the square wave input signal is displayed.

n. Check that the pulse step amplitude is a 6 div (600 mV) step. Adjust the VERT GAIN (screwdriver adjust) control for a 6 div step if necessary. See Fig. 5-2 for this waveform.

2. Check Vertical Deflection Factors

a. CHECK that the deflection factors are within 3% for the control settings given in Table 5-1.

TABLE 5-1

mV/DIV	Signal Amplitude volts	Step Amplitude/ div	Tolerance / div
500	.6	1.2	.07
200	.6	3	.18
100	.6	6	.18
50	.3	6	.18
20	.12	6	.18
10	.06	6	.18
5	.03	6	.18
2	.012	6	.18

b. Disconnect the coaxial cable and adapter from the Sampling Head input connector and disconnect the 50 Ω Amplitude Calibrator Output connector, and the coaxial cable from the 50 Ω Amplitude Calibrator.

3. Check TIME/DIV Accuracy

a. Connect the BNC coaxial cable from the Trigger Recognizer Input connector to the time-mark generator trigger output connector.

b. Connect a BNC coaxial cable from the time-mark generator marker output connector to the sampling head lower input connector with a BNC female to 3-mm male adapter.

c. Set the time-mark generator for 1 μs time marks and a 1 μs trigger.

d. Set the 7S12 controls:

mV/DIV	500
TIME-DISTANCE Multiplier	X10
TIME/DIV	1 μs
DC OFFSET	display trace

e. CHECK that the TIME/DIV accuracy is within 3% (0.24 div) for all ranges according to Table 5-2. Perform all measurements from graticule line 1 to graticule line 9 (8 div range). See Fig. 5-3 which shows the 1 μs/div measurement. The check should be made at each end of the TIME-DISTANCE scale.

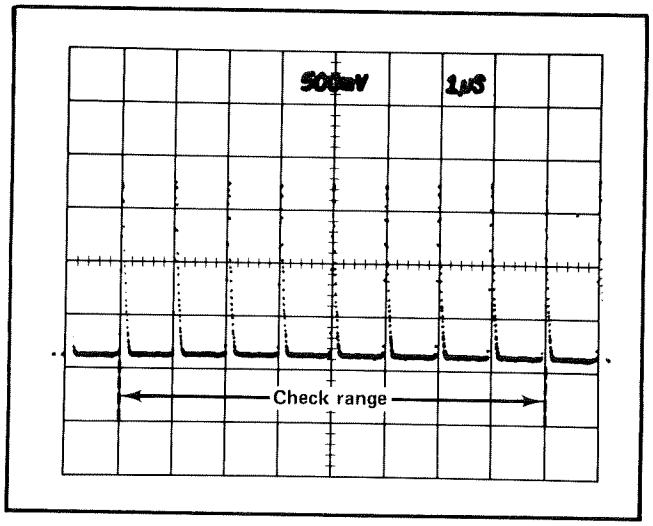

Fig. 5-3. Correct TIME/DIV check range. One μs period markers are shown.

4. Check TIME-DISTANCE Dial Accuracy

a. Set the time-mark generator for 1 μs time marks.

b. Set the 7S12 controls:

mV/DIV	200
TIME-DISTANCE Multiplier	X10
TIME/DIV	20 ns
TIME-DISTANCE Dial	0
DC OFFSET	display trace

c. Adjust the FINE control to place a marker on graticule line 5. See Fig. 5-4 for this waveform.

d. Turn the TIME-DISTANCE control and count the markers that pass graticule line 5. Place the tenth marker from graticule line 5 at line 5.

e. CHECK that the TIME-DISTANCE Dial is at 1.00 μs within 0.01 μs.

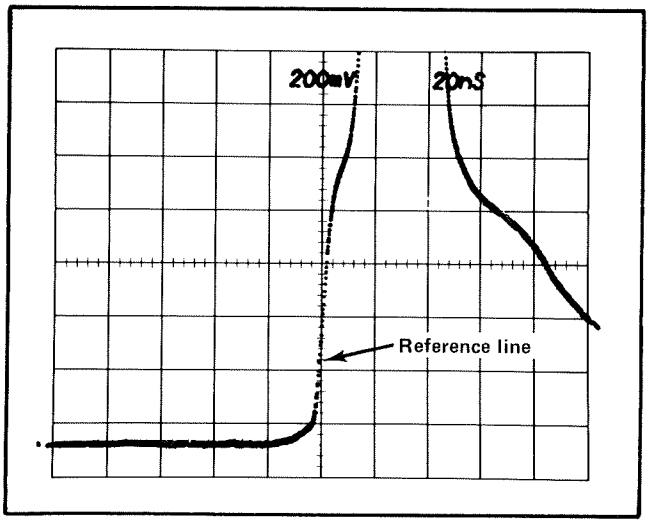

Fig. 5-4. TIME-DISTANCE Dial accuracy check. A 1 μs period marker is shown.

5. Check DC OFFSET Range

a. Remove the coaxial cable and adapter from the Sampling Head and the Time Mark Generator. Retain the trigger coaxial cable.

b. Set the Sampler mV/Div switch at 500.

c. Turn the DC OFFSET and FINE controls from the fully clockwise position to the fully counterclockwise position.

d. CHECK that the trace moves from at least 2 div (−1 V) above the graticule center to at least 2 div (+1 V) below the graticule center.

e. Remove the coaxial cable from the Time Mark Generator to the Trigger Recognizer.

TABLE 5-2

TIME/ DIV	TIME-DISTANCE Multiplier	Marker Selector Input Signal	Marks/ Div
1 μs	X10	1 μs	1
.5 μs	X10	.5 μs	1
.2 μs	X10	.1 μs	2
.1 μs	X10	.1 μs	1
50 ns	X10	50 ns	1
20 ns	X10	10 ns	2
10 ns	X10	10 ns	1
5 ns	X10	5 ns	1
2 ns	X10	2 ns	1
.1 μs	X1	.1 μs	1
50 ns	X1	50 ns	1
20 ns	X1	10 ns	2
10 ns	X1	10 ns	1
5 ns	X1	5 ns	1
2 ns	X1	2 ns	1
1 ns	X1	2 ns	.5
10 ns	X.1	10 ns	1
5 ns	X.1	5 ns	1
2 ns	X.1	2 ns	1
1 ns	X.1	2 ns	.5

S-6, S-52 and 7S12 SYSTEM CHECKS

1. Check Pulse Amplitude

a. Install an S-6 Sampling Head in the Sampling (left) compartment and an S-52 Pulse Generator Head in the Pulse Generator (right) compartment of the 7S12 TDR/ SAMPLER.

b. Connect a 3-mm U-shaped coaxial cable (Tektronix Part No. 015-1017-01) from the S-52 Pulse Output connector to the lower Sampling Head input connector.

c. Connect a 50 Ω 3-mm male termination (Tektronix Part No. 015-1022-00) to the upper Sampling Head input connector.

d. Set the 7S12 controls:

TIME-DISTANCE Multiplier	X1
TIME/DIV	10 ns
mV	on
mV/DIV	100
DC OFFSET	display pulse
TIME-DISTANCE Dial	0
FINE (ZERO SET)	fully clockwise

e. CHECK that the pulse amplitude is at least 200 mV (2 div). This waveform is similar to Fig. 5-2.

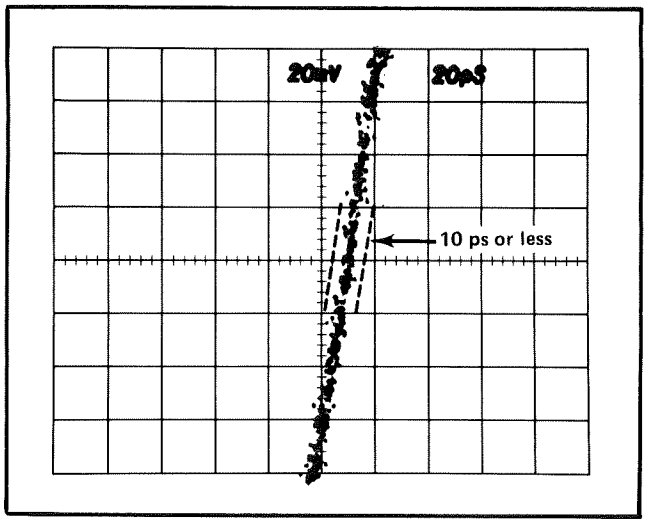

Fig. 5-5. Pulse jitter measurement of the S-6, S-52 and 7S12 system.

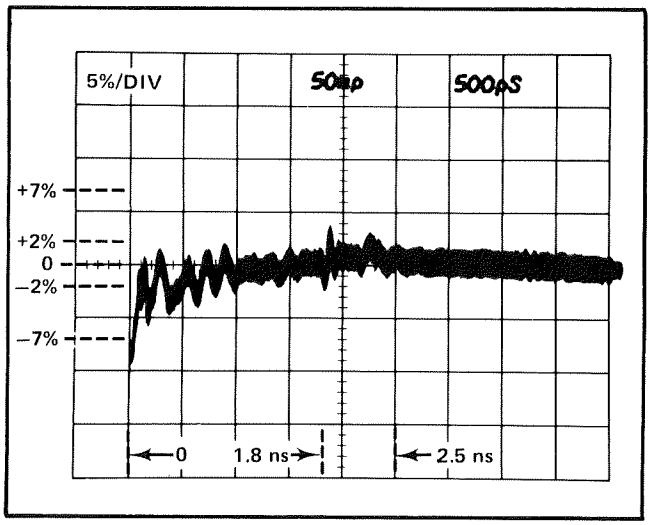

Fig. 5-6. Pulse aberrations of the S-6, S-52 and 7S12 system.

2. Check Pulse Jitter

a. Set the 7S12 controls:

mV/DIV	20
TIME-DISTANCE Multiplier	X.1
TIME/DIV	20 ps
DC OFFSET	display pulse edge
TIME-DISTANCE Dial	display pulse edge

b. CHECK that the pulse jitter is not greater than 10 ps (.5 div). Use only 90% of the trace width for this check. See Fig. 5-5 for this waveform.

3. Check Pulse Aberrations

a. Remove the 50 Ω termination from the Sampling Head upper connector and install a 3-mm, 1 ns, 50 Ω coaxial line (Tektronix Part No. 015-1023-00) with the 50 Ω termination attached. Use a 3-mm female to female adapter (Tektronix Part No. 015-1012-00) to connect the 50 Ω termination to the coaxial line.

b. Set the 7S12 controls:

TIME/DIV	.5 ns
TIME-DISTANCE Dial	0
FINE (ZERO SET)	display pulse step
DC OFFSET	display pulse top
mρ	on
mρ/DIV	200
ρCAL (screwdriver adjust)	5 div pulse

c. Set the mρ/DIV switch at 50 and place the pulse step near the left edge of the graticule.

d. CHECK that the aberrations are within +7%, –7%, total of 10% P-P within 1.8 ns of the step edge with the reference level at 1.8 ns from the step edge.

e. Set the Time-Distance Multiplier at X1, the Time/Div switch at 50 ns and turn the Time-Distance and Fine (Zero Set) controls fully clockwise.

f. Place the top of the pulse on the graticule centerline. Use the portion of the pulse that is 300 ns (6 div) from the start of the pulse for the reference level.

g. Set the Time-Distance Multiplier at X.1 and the Time/Div switch at 500 ps. Adjust the Time-Distance control to position the point which is 2.5 ns from the start of the pulse at the graticule center. See Fig. 5-6.

h. CHECK that the aberrations are within +2%, –2%, total of 4% P-P after 2.5 ns of the pulse edge. See Fig. 5-6.

4. Check Pulse Risetime

a. Remove the 50 Ω termination with the adapter and install a 3-mm female short-circuit termination on the end of the coaxial line.

b. Set the 7S12 controls:

mV	on
mV/DIV	100
TIME/DIV	20 ps
TIME-DISTANCE Dial	display incident pulse

c. Adjust the mV/DIV VARIABLE control so that the 0% and the 100% levels of the incident pulse are 5 div

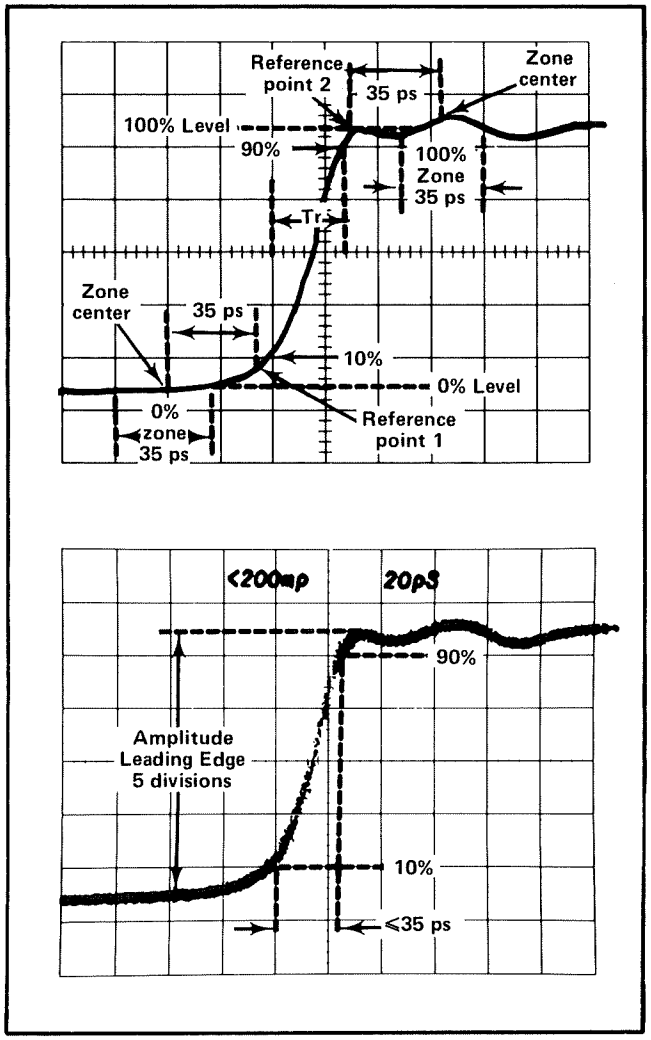

Fig. 5-7. Incident pulse risetime of the S-6, S-52 and 7S12 system.

apart. Use the following procedure to locate the 0% (100% is in parenthesis) level for the incident or reflected pulse. This procedure is necessary whenever a level is not clearly defined.

1. Find the knee reference point at the start (end) of the step where the rate of change of the slope is maximum (the radius of curvature is least). See Fig. 5-7 for this waveform.

2. At a distance of one risetime before (after) the knee reference point in step 1, place the center of a zone which is one risetime in width. The S-6, S-52 and 7S12 system risetime is 35 ps.

3. Determine the average level of the waveform within the zone and use it for the 0% (100%) reference level.

d. CHECK that the incident pulse risetime from the 10% level to the 90% level is 35 ps or less.

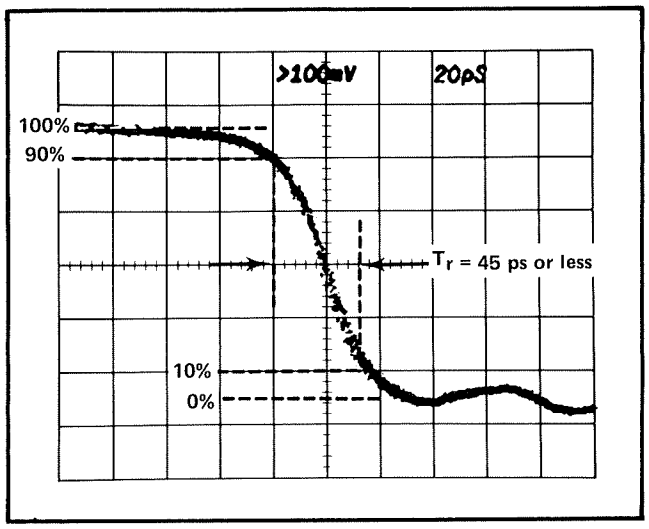

Fig. 5-8. Reflected pulse risetime of the S-6, S-52, and 7S12 system.

e. Display the reflected pulse and adjust the mV/DIV VARIABLE control so that the 100% level and the 0% level are 5 div apart. Use the step c procedure to establish the two levels. The 100% level is the start (top) and the 0% level is the end (bottom) of the pulse. The system reflected pulse risetime (actually a falltime) of 45 ps is to be used for the zone widths to establish the 0% and 100% levels.

f. CHECK that the reflected pulse risetime from the 90% level to the 10% level is 45 ps or less. See Fig. 5-8 for this waveform.

g. Set the mV/DIV VARIABLE at CAL IN.

S-5, S-54 and 7S12 SYSTEM CHECKS

1. Check Pulse Amplitude

a. Install an S-5 Sampling Head in the Sampling (left) compartment and an S-54 Pulse Generator Head in the Pulse Generator (right) compartment of the 7S12 TDR/SAMPLER.

b. Connect an 8-inch BNC coaxial cable from the Pulse Generator Head Pulse Output connector to the Sampling Head input connector which has a BNC 50 Ω through-line termination attached.

c. Set the 7S12 controls:

mV	on
mV/DIV	100
mV/DIV VARIABLE	CAL IN
TIME-DISTANCE Multiplier	X10
TIME/DIV	.1 μs
TIME-DISTANCE Dial	0
FINE (ZERO SET)	fully clockwise
DC OFFSET	display step

d. CHECK that the pulse step is at least 400 mV (4 div). This waveform is similar to Fig. 5-2.

2. Check Pulse Jitter

a. Set the 7S12 controls:

mρ	on
ρCAL (screwdriver adjust)	fully clockwise
mρ/DIV	10
mρ/DIV VARIABLE	fully clockwise
TIME-DISTANCE Multiplier	X.1
TIME/DIV	20 ps
DC OFFSET	display pulse edge
TIME-DISTANCE Dial	display pulse edge

b. CHECK that the pulse jitter is not greater than 20 ps (1 div). Use only 90% of the trace width for this check. See Fig. 5-5 for a similar waveform.

3. Check Pulse Aberrations

a. Remove the 50 Ω through-line termination and connect a BNC "T" connector to the Sampling Head input connector.

b. Connect the 8-inch BNC coaxial cable from the Pulse Generator Head Pulse Output connector to the "T" connector.

c. Connect about 3 feet of BNC coaxial cable to the "T" connector and terminate the coaxial cable with a GR 50 Ω termination and a GR to BNC female adapter.

d. Set the 7S12 controls:

mρ	on
mρ/DIV VARIABLE	CAL IN
mρ/DIV	200
TIME-DISTANCE Multiplier	X10
TIME/DIV	5 ns
DC OFFSET	display step
TIME-DISTANCE Dial	display step
ρCAL (screwdriver adjust)	5 div step

e. Set the mρ/DIV switch at 20 and place the step near the left edge of the graticule. See Fig. 5-9 for this waveform.

f. CHECK that the aberrations do not exceed +4% (+2 div) or −6% (−3 div) within the first 17 ns (3.4 div) of the step and not more than +1.5 (+.75 div) or −1.5% (−.75 div) thereafter.

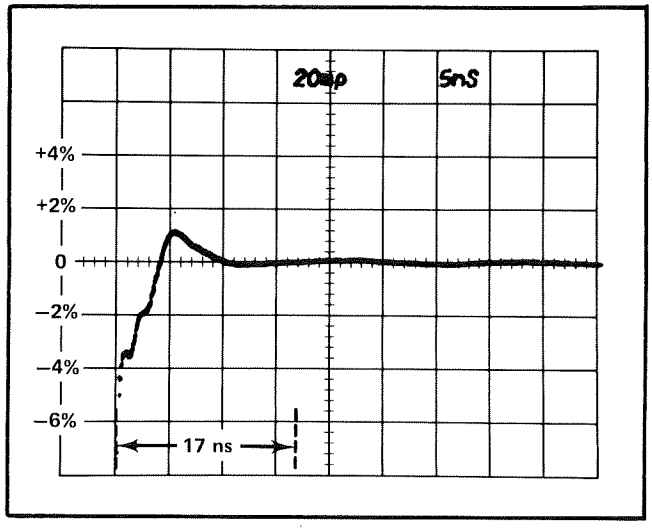

Fig. 5-9. Pulse aberrations of the S-5, S-54 and 7S12 system.

4. Check Pulse Risetime

a. Set the 7S12 controls:

mV	on
mV/DIV	100
TIME-DISTANCE Multiplier	X1
TIME/DIV	1 ns
DC OFFSET	display step
TIME-DISTANCE Dial	display step

b. ADJUST the mV/DIV VARIABLE control so that the 0% and the 100% levels are 5 div apart. The 0% level is the well defined base of the pulse. The 100% level must be established in the manner described in step 4c of the S-6, S-52 and 7S12 System check, since the top of the pulse is not well defined. The risetime to be used in the procedure is 1.5 ns. See Fig. 5-10 for the waveform.

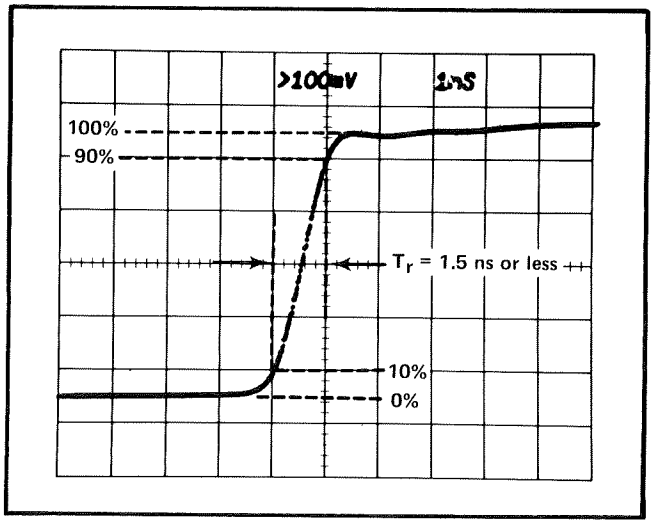

Fig. 5-10. Incident pulse risetime of the S-5, S-54 and 7S12 system.

c. CHECK that the incident pulse risetime from the 10% level to the 90% level is 1.5 ns or less.

This completes the Performance Check.

ADJUSTMENT PROCEDURE

1. Preliminary Procedure

a. Install two Flexible Plug-in Extenders (Tektronix Calibration Fixture 067-0616-00) in the 7704A Oscilloscope. Place one in the Right Vert Compartment and the other in the A Horiz compartment.

b. Connect the 7S12 to the extenders. Do not cross the cables.

2. Adjust Memory Gate Width Control R390 and Memory Gain Control C275 Using Normalizer Head

NOTE

If a Normalizer Head is not available, use Step 2 (Alternate).

a. Install a 7A16A Amplifier in the oscilloscopes Left Vertical compartment and a 7B80 Time Base in the B Horizontal compartment.

b. Install a Normalizer Head (Tektronix Calibration Fixture 067-0572-01) in the 7S12 Sampling compartment and an S-52 Pulse Generator Head in the Pulse Generator compartment.

c. Switch the power on to the oscilloscope, the time-mark generator, and to the 50 Ω Amplitude Calibrator. Allow a 5-minute warm up.

d. Set the Normalizer Head Units switch at Volts and the Units/Div Multiplier switch at X1.

e. Push the oscilloscope Left Vertical Mode switch, Left Vert Trigger Source switch, and B Horizontal Mode switch.

f. Set the 7S12 controls:

mV	on
mV/DIV VARIABLE	CAL IN
mV/DIV	100
REP	on
TIME-DISTANCE Multiplier	X10
TIME/DIV	1 μs
DC OFFSET	display wave-form

Set the 7A16A controls:

VOLTS/DIV	2
INPUT	DC

Set the 7B80 controls:

TIME/DIV	50 ns
MAGNIFIER	X1
SOURCE	INT

g. Connect a 10X probe from the 7A16 input to TP394. Adjust R390 for 190 ns pulse width measured at the waveform's 50% points.

h. Set the 7A16A controls:

Input	AC
Polarity	+Up
Bandwidth	20 MHz
Volts/Div	20 mV

i. Connect a 10X probe from the 7A16A connector to the 7S12 VERT SIG OUT jack.

j. ADJUST the Memory Gain control C275 to obtain 1 V (5 div) separation of the two traces. See Fig. 5-11 for the control location.

2. (Alternate) Adjust Memory Gain Control C275 Using Sampling Head

NOTE

This is an alternate procedure which may be used if a Normalizer Head is not available. The 7S12 Memory Gain is adjusted to compensate for the gain of the Sampling Head used and may not be properly adjusted for other Sampling Heads.

a. Install an S-6 Sampling Head in the Sampling compartment and an S-52 Pulse Generator Head in the Pulse Generator compartment of the 7S12.

b. Switch the power on to the oscilloscope, the time-mark generator, and to the 50 Ω Amplitude Calibrator. Allow a 5-minute warm up.

c. Connect a 3-mm U-shaped coaxial line (Tektronix Part No. 015-1017-01) from the Pulse Generator Head Pulse Output connector to the Sampling Head lower input connector.

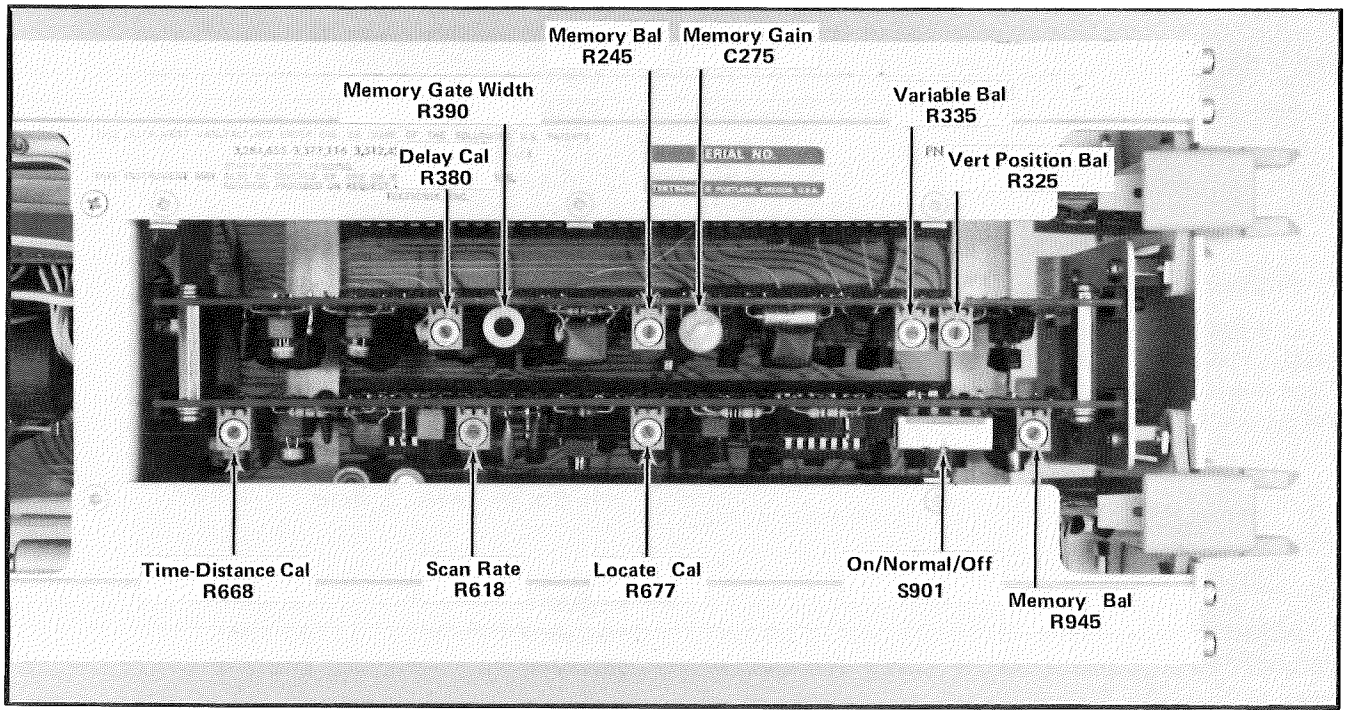

Fig. 5-11. Control locations on the Vertical and Horizontal cards.

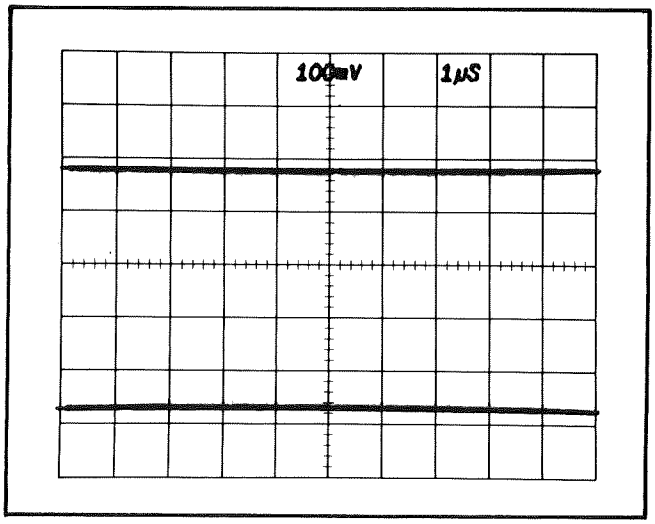

Fig. 5-12. Waveform for Memory Gate Width control R390 adjustment using a Normalizer Head.

d. Connect a 3-mm male 50 Ω termination to the Sampling Head upper input connector.

e. Push the oscilloscope Right Vertical Mode switch and the Right Vert Trigger Source switch.

f. Set the 7S12 controls:

mV	on
mV/DIV VARIABLE	CAL IN
mV/DIV	100
REP	on
TIME-DISTANCE Multiplier	X1
TIME/DIV	.1 μs
TIME-DISTANCE Dial	0
FINE (ZERO SET)	fully clockwise
DC OFFSET	display pulse
SCAN	fully clockwise

Note: If the step is off screen, adjust Pulse Position control R592 to display the step. See Fig. 5-15 for the control location.

g. Adjust the 7S12 mV/DIV VARIABLE control for a 5 div step.

h. ADJUST the Memory Gain control C275 to place the first dot above the 0% level at the 90% level (4.5 div above the 0% level). See Fig. 5-11 for the control location and Fig. 5-13 for the waveform.

i. Set the mV/DIV VARIABLE at the CAL IN position.

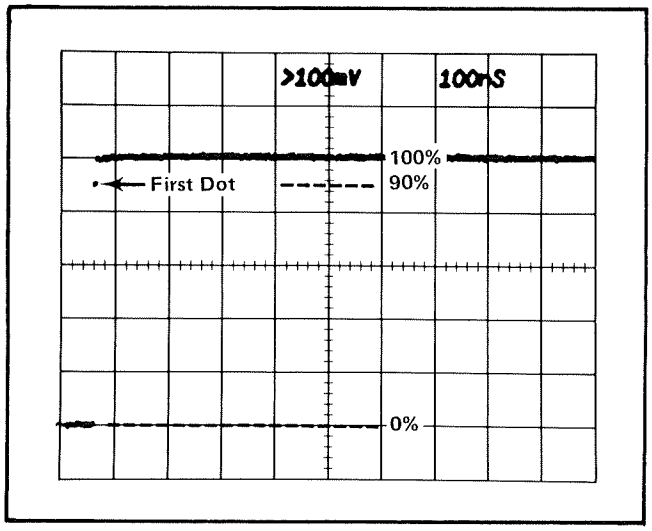

Fig. 5-13. Waveform for Memory Gate Width control R390 and Memory Gain control C275 adjustments using a Sampling Head.

j. Remove the coaxial line from the Sampling Head input connector to the Pulse Generator Head Pulse Output connector.

3. Adjust Memory Balance Control R245, Variable Balance Control R335 and Vertical Position Balance Control R325 (For this Step Set 5901 to Off)

a. Remove the Normalizer Head and install an S-6 Sampling Head with a 50 Ω termination on the upper input connector in the 7S12 Sampling compartment. Set the mV/DIV switch at 100.

b. Push the oscilloscope Left Vertical Mode switch and connect a 10X probe to the 7A16A Amplifier Input.

c. Set the Amplifier Volts/Div switch at 10 mV and push the ground switch.

d. Set the Amplifier trace at graticule center (zero reference) and then push the DC switch.

e. Connect the probe tip to the OFFSET OUT jack and adjust the DC OFFSET control for 0 V (trace at graticule center). The DC OFFSET control must not be touched during the remainder of this step.

f. Connect the probe tip to the VERT SIG OUT jack.

g. ADJUST the Memory Balance control R245 to set the VERT SIG OUT at 0 V. See Fig. 5-11 for the control location.

h. Push the oscilloscope Right Vertical Mode switch.

i. ADJUST the Variable Balance control R335 for no trace shift when the mV/DIV VARIABLE control is rotated throughout its range.

j. Set the mV/DIV VARIABLE control at the CAL IN position.

k. ADJUST the Vertical Position Balance control R325 to place the trace at graticule center.

4. Adjust Delay Calibrate Control R380

a. Remove the Pulse Generator Head and install an S-53 Trigger Recognizer.

b. Connect a 10-inch (or as short as possible) length of 50 Ω coaxial cable having a BSM female connector and a BNC male connector (Tektronix Part No. 012-0128-00) from the S-53 Trigger Recognizer Trig Out connector to the 7M11 50 Ω Delay Line Input 1 connector with a GR to BNC female adapter.

c. Connect a 5-ns, GR coaxial cable from the Delay Line Output 1 connector to the Sampling Head lower input connector with a GR to 3-mm male adapter.

d. Set the Trigger Recognizer Stability control fully clockwise and the Level control at mid-range to obtain a trace.

e. Set the 7S12 controls:

mV/DIV	500
TIME-DISTANCE Multiplier	X.1
TIME/DIV	5 ns
TIME-DISTANCE Dial	0
FINE	fully clockwise
DC OFFSET	display pulse

f. ADJUST R380 to place the 10% to 20% level of the leading edge of the pulse at graticule center (25 ns from

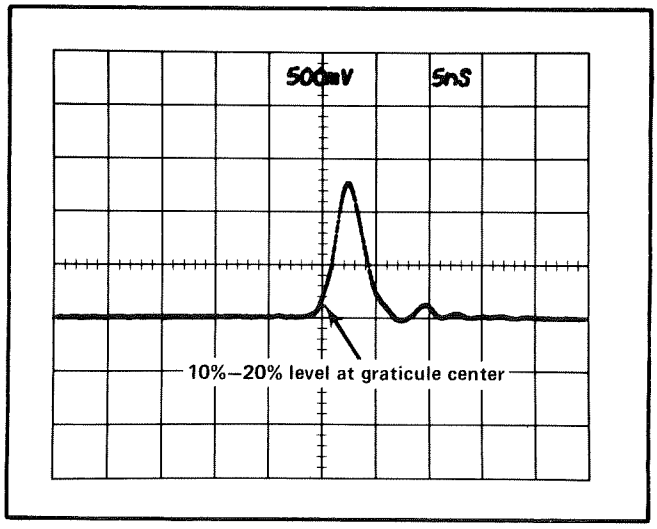

Fig. 5-14. Delay Calibrate control R380 adjustment waveform.

graticule line 0). See Fig. 5-11 for the control location and Fig. 5-14 for the waveform.

g. Remove the coaxial cable from between the Trigger Recognizer Trig Out connector and the Delay Line Input 1 connector, and the coaxial cable from the Delay Line Output 1 connector.

5. Adjust VERT GAIN Control

a. Connect a GR coaxial cable from the Sampling Head lower input connector with a GR to 3-mm male adapter to the 50 Ω Amplitude Calibrator Output connector.

b. Connect a BNC coaxial cable from the Trigger Recognizer Input connector to the 50 Ω Amplitude Calibrator Trigger Output connector.

c. Set the 50 Ω Amplitude Calibrator DC-Square wave switch at Square wave and the Volts switch at .3 V.

d. Set the Trigger Recognizer Stability control fully counterclockwise. Set the Trigger Recognizer Level control fully clockwise. Set the Slope switch to +. Adjust the Trigger Recognizer Level control counterclockwise until the trigger signal appears.

e. Set the 7S12 controls:

mV/DIV	50
TIME-DISTANCE Multiplier	X10
TIME/DIV	1 μs
TIME-DISTANCE Dial	0
FINE (ZERO SET)	fully clockwise
DC OFFSET	display step

Note: If the step is off the screen release the locate button.

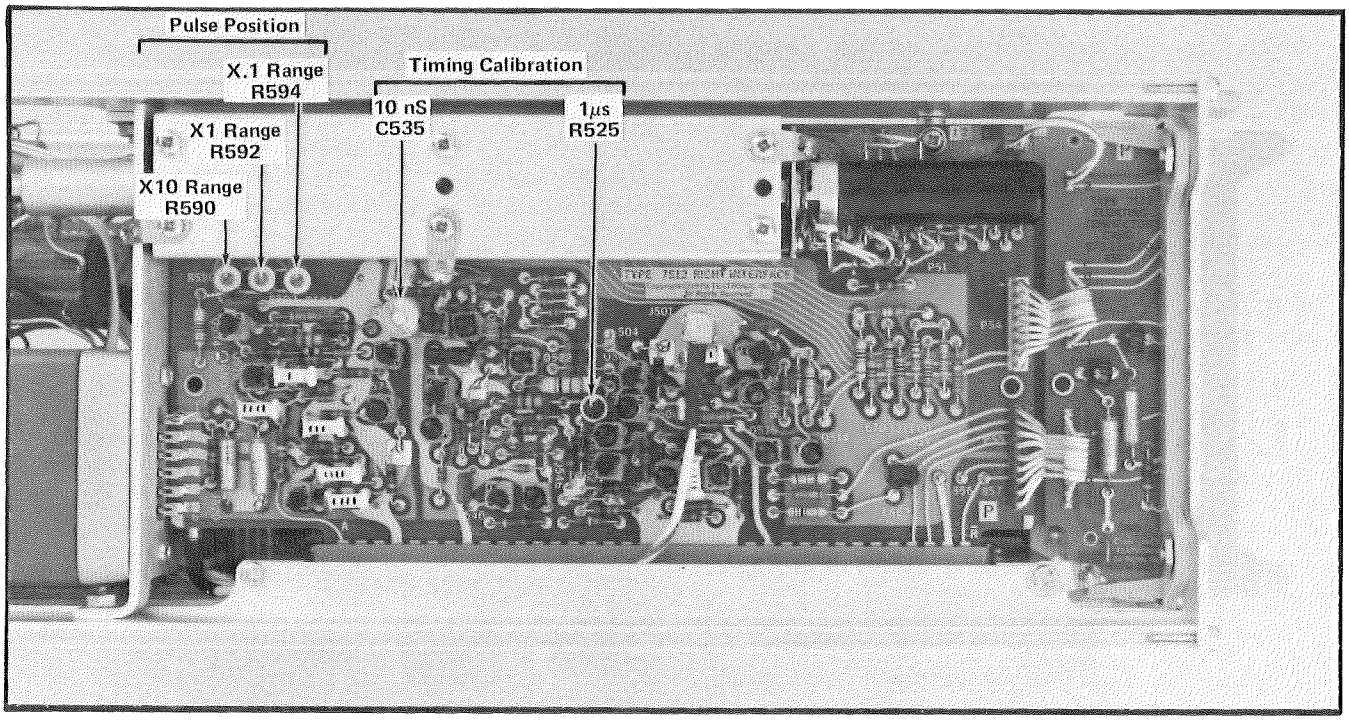

Fig. 5-15. Control locations on the Right Interface card.

f. ADJUST the VERT GAIN control (front panel) for a 6 div step (.3 V). See Fig. 5-2 for a similar waveform.

g. Remove the coaxial cable and adapter from the Sampling Head Input and the calibrator.

6. Adjust HORIZ POS and SWEEP CAL Controls

a. Position the free running trace on the screen and set the trace intensity at a low level.

b. Push the 7S12 MAN switch.

c. ADJUST the HORIZ POS and SWEEP CAL controls so that the dot moves from graticule line zero (left edge) to graticule line ten (right edge) when the SCAN control is turned from the fully counterclockwise position to the fully clockwise position. The SWEEP CAL controls the dot range of movement and the HORIZ POS positions the range on the screen. See Fig. 5-1 for this display.

d. Push the REP switch and disconnect the cable from the 50 Ω Amplitude Calibrator Trigger Out connector.

7. Adjust Time Controls R525 and C535

a. Connect a BNC coaxial cable from the Trigger Recognizer Input to the time-mark generator trigger output connector.

b. Connect a BNC coaxial cable from the sampling head input with a 3-mm male to BNC female adapter to the time-mark generator marker output connector.

c. Set the time-mark generator for 1 μs time-marks and a 1 μs trigger.

d. Set the 7S12 controls:

mV/DIV	500
TIME-DISTANCE	.50 μs
TIME-DISTANCE Multiplier	X10
TIME/DIV	1 μs

e. Adjust Timing control R525 for one marker per division. Use the FINE control to place the markers at the graticule lines and use graticule lines one through nine for this adjustment. See Fig. 5-15 for the control location and Fig. 5-3 for this waveform.

f. Set the TIME-DISTANCE Multiplier at X.1 and the TIME/DIV at 10 ns.

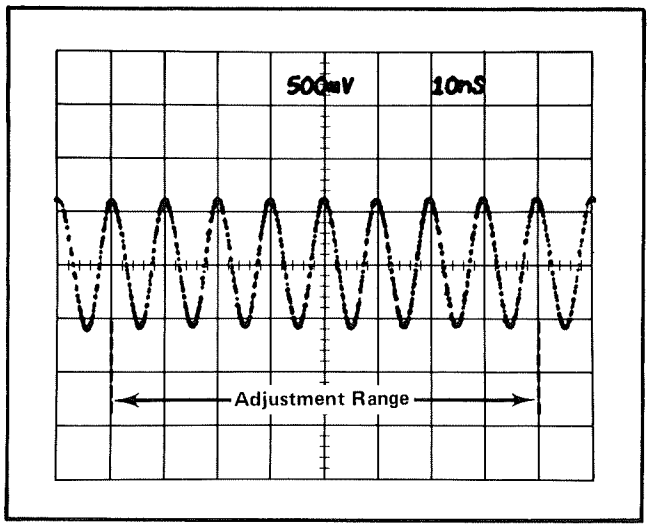

Fig. 5-16. Correct 10 ns/div adjustment waveform.

g. Set the time-mark generator for 10 ns time-marks.

h. ADJUST Timing control C535 for one cycle to sine wave per division from graticule line 1 to graticule line 9. See Fig. 5-15 for the control location and Fig. 5-16 for this waveform.

8. Adjust TIME-DISTANCE Calibration Control R668

a. Set the time-mark generator for 1 μs time-marks.

b. Set the 7S12 controls:

mV/DIV	200
TIME-DISTANCE Multiplier	X10
TIME/DIV	20 ns
TIME-DISTANCE	0

c. Turn the Trigger Recognizer controls fully clockwise.

d. Adjust the FINE (ZERO SET) control to place a marker at graticule line 5.

e. Turn the TIME-DISTANCE control to 1.00 μs and count the markers that pass graticule line 5.

f. ADJUST the TIME-DISTANCE Calibration control R668 so that the tenth marker from graticule line 5 is placed on graticule line 5. See Fig. 5-11 for the control location and Fig. 5-4 for the waveform.

9. Adjust Pulse Position Controls R594, R592 and R590

a. Remove the cables, the adapter and the Trigger Recognizer.

b. Install an S-52 Pulse Generator Head in the 7S12 Pulse Generator compartment and connect a 3-mm U-shaped coaxial line (Tektronix Part No. 015-1017-01) from the Pulse Generator to the Sampling Head lower input.

c. Set the 7S12 controls:

mV/DIV	100
TIME-DISTANCE Multiplier	X.1
TIME/DIV	1 ns
TIME-DISTANCE	0
FINE (ZERO SET)	fully clockwise

d. ADJUST the Pulse Position control R594 to place the pulse at graticule line 5. See Fig. 5-15 for the three controls location and Fig. 5-17 for this waveform.

e. Set the TIME-DISTANCE Multiplier switch at X1.

f. ADJUST the Pulse Position control R592 to place the pulse at graticule line 5.

NOTE

Omit the remainder of this step if only the S-52 Pulse Generator Head is used in the 7S12. Complete the remainder of this step if the S-54 Pulse Generator Head is also used in the 7S12.

g. Remove the S-52 with the U-shaped coaxial cable from the 7S12.

h. Install an S-54 Pulse Generator Head in the 7S12 Pulse Generator compartment.

i. Connect a BNC coaxial cable (Tektronix Part No. 012-0118-00) from the S-54 Pulse Output connector to the S-6 lower LOOP THRU input connector with a BNC female to 3 mm male adapter.

j. Set the TIME-DISTANCE Multiplier switch at X10.

k. ADJUST the Pulse Position control R590 to place the pulse at graticule line 5.

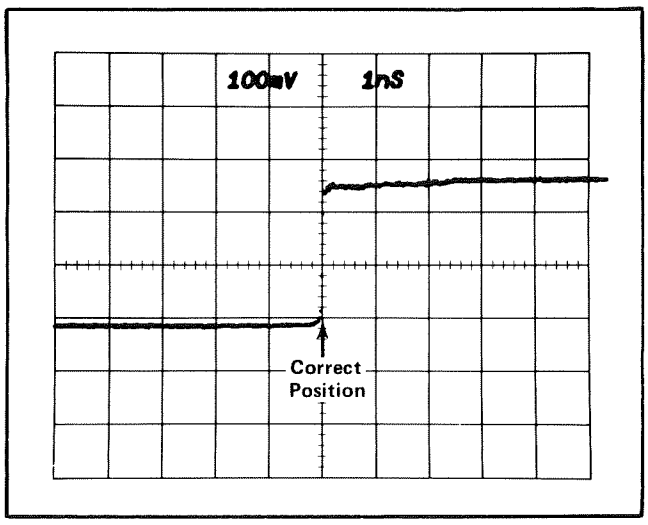

Fig. 5-17. Correct pulse start position adjustment waveform.

10. Adjust Scan Rate Control R618

a. Push the 7S12 HIGH RESOLUTION switch and turn the SCAN control fully counterclockwise. Press the LOCATE switch in.

b. ADJUST the Scan Rate control R618 for one sweep in 50 or more seconds (5 s/div). Use a watch sweep-second hand to measure the time. See Fig. 5-10 for the control location.

c. Switch to normal resolution and turn the SCAN control fully clockwise.

11. Adjust LOCATE Calibration Control R677

a. Set the 7S12 controls as follows:

TIME-DISTANCE Multiplier	X.1
TIME/DIV	.2 ns

b. Position the step edge at graticule center with the TIME-DISTANCE control.

c. Push to release the LOCATE switch.

d. ADJUST the LOCATE Calibration control R677 to center the bright portion of the trace on the step edge. See Fig. 5-11 for the control location.

e. Push the LOCATE switch in.

12. Adjust Correction Memory Control R945

a. Disconnect the coaxial cable from the Pulse Generator Head to the Sampling Head.

b. Connect a 3 mm female short circuit termination to the coaxial line on the S-6 upper LOOP THRU connector.

c. ADJUST the Correction Memory control R945 for no trace shift when Correction Memory switch S901 is switched from the Off (rear) position to its Normal (center) position. See Fig. 5-11 for the control and switch location.

d. Set the Correction Memory switch at its Normal (center) position.

This completes the Adjustment Procedure.

NOTES

REPLACEABLE ELECTRICAL PARTS

PARTS ORDERING INFORMATION

Replacement parts are available from or through your local Tektronix, Inc. Field Office or representative.

Changes to Tektronix instruments are sometimes made to accommodate improved components as they become available, and to give you the benefit of the latest circuit improvements developed in our engineering department. It is therefore important, when ordering parts, to include the following information in your order: Part number, instrument type or number, serial number, and modification number if applicable.

If a part you have ordered has been replaced with a new or improved part, your local Tektronix, Inc. Field Office or representative will contact you concerning any change in part number.

Change information, if any, is located at the rear of this manual.

SPECIAL NOTES AND SYMBOLS

X000	Part first added at this serial number
00X	Part removed after this serial number

ITEM NAME

In the Parts List, an Item Name is separated from the description by a colon (:). Because of space limitations, an Item Name may sometimes appear as incomplete. For further Item Name identification, the U.S. Federal Cataloging Handbook H6-1 can be utilized where possible.

ABBREVIATIONS

ACTR	ACTUATOR	PLSTC	PLASTIC
ASSY	ASSEMBLY	QTZ	QUARTZ
CAP	CAPACITOR	RECP	RECEPTACLE
CER	CERAMIC	RES	RESISTOR
CKT	CIRCUIT	RF	RADIO FREQUENCY
COMP	COMPOSITION	SEL	SELECTED
CONN	CONNECTOR	SEMICOND	SEMICONDUCTOR
ELCTLT	ELECTROLYTIC	SENS	SENSITIVE
ELEC	ELECTRICAL	VAR	VARIABLE
INCAND	INCANDESCENT	WW	WIREWOUND
LED	LIGHT EMITTING DIODE	XFMR	TRANSFORMER
NONWIR	NON WIREWOUND	XTAL	CRYSTAL

CROSS INDEX - MFR. CODE NUMBER TO MANUFACTURER

Mfr. Code	Manufacturer	Address	City, State, Zip Code
00853	SANGAMO WESTON INC COMPONENTS DIV	SANGAMO RD PO BOX 128	PICKENS SC 29671-9716
01121	ALLEN-BRADLEY CO	1201 SOUTH 2ND ST	MILWAUKEE WI 53204-2410
01295	TEXAS INSTRUMENTS INC SEMICONDUCTOR GROUP	13500 N CENTRAL EXP PO BOX 655012	DALLAS TX 75265
02111	HAMILTON STANDARD CONTROLS INC SPECTROL DIV	17070 E GALE AVE P O BOX 1220	CITY OF INDUSTRY CA 91749
02735	RCA CORP SOLID STATE DIVISION	ROUTE 202	SOMERVILLE NJ 08876
03508	GENERAL ELECTRIC CO SEMI-CONDUCTOR PRODUCTS DEPT	W GENESEE ST	AUBURN NY 13021
04222	AVX CERAMICS DIV OF AVX CORP	19TH AVE SOUTH P O BOX 867	MYRTLE BEACH SC 29577
04713	MOTOROLA INC SEMICONDUCTOR PRODUCTS SECTOR	5005 E MCDOWELL RD	PHOENIX AZ 85008-4229
05397	UNION CARBIDE CORP MATERIALS SYSTEMS DIV	11901 MADISON AVE	CLEVELAND OH 44101
05574	VIKING CONNECTORS INC SUB OF CRITON CORP	21001 NORDHOFF ST	CHATSWORTH CA 91311-5911
07263	FAIRCHILD SEMICONDUCTOR CORP NORTH AMERICAN SALES SUB OF SCHLUMBERGER LTD MS 118	10400 RIDGEVIEW CT	CUPERTINO CA 95014
07716	TRW INC TRW IRC FIXED RESISTORS/BURLINGTON	2850 MT PLEASANT AVE	BURLINGTON IA 52601
09969	DALE ELECTRONICS INC	EAST HIGHWAY 50 P O BOX 180	YANKTON SD 57078
12697	CLAROSTAT MFG CO INC	LOWER WASHINGTON ST	DOVER NH 03820
13556	TRW SYLINDRICAL CONNECTOR DIV OF TRW INC	8821 SCIENCE CENTER DRIVE	MINNEAPOLIS MN 55428-3619
14433	ITT SEMICONDUCTORS DIV		WEST PALM BEACH FL
14552	MICROSEMI CROP	2830 S FAIRVIEW ST	SANTA ANA CA 92704-5948
19701	MEPCO/CENTRALAB A NORTH AMERICAN PHILIPS CO	P O BOX 760	MINERAL WELLS TX 76067-0760
22229	SOLITRON DEVICES INC SEMICONDUCTOR GROUP SAN DIEGO OPERS	8808 BALBOA AVE	SAN DIEGO CA 92123
23880	STANFORD APPLIED ENGINEERING INC	340 MARTIN AVE	SANTA CLARA CA 95050-3112
24546	CORNING GLASS WORKS	550 HIGH ST	BRADFORD PA 16701-3737
24931	SPECIALTY CONNECTOR CO INC	2100 EARLYWOOD DR PO BOX 547	FRANKLIN IN 46131
31433	UNION CARBIDE CORP ELECTRONICS DIV	HWY 276 SE PO BOX 5928	GREENVILLE SC 29606
32997	BOURNS INC TRIMPOT DIV	1200 COLUMBIA AVE	RIVERSIDE CA 92507-2114
33095	SPECTRUM CONTROL INC	2185 WEIGHT ST	ERIE PA 16505
50434	HEWLETT-PACKARD CO OPTOELECTRONICS DIV	370 W TRIMBLE RD	SAN JOSE CA 95131
52763	STETTNER ELECTRONICS INC	6135 AIRWAYS BLVD PO BOX 21947	CHATTANOOGA TN 37421-2970
54583	TDK ELECTRONICS CORP	12 HARBOR PARK DR	PORT WASHINGTON NY 11550
57668	R-OHM CORP	16931 MILLIKEN AVE	IRVINE CA 92713
58854	GTE PRODUCTS CORP LIGHTING PRODUCTS GROUP	60 BOSTON ST	SALEM MA 01970-2147
59660	TUSONIX INC	7741 N BUSINESS PARK DR PO BOX 37144	TUCSON AZ 85740-7144
59821	MEPCO/CENTRALAB A NORTH AMERICAN PHILIPS CO	7158 MERCHANT AVE	EL PASO TX 79915-1207
71744	GENERAL INSTRUMENT CORP LAMP DIV/WORLD WIDE/	4433 N RAVENSWOOD AVE	CHICAGO IL 60640-5802
73138	BECKMAN INDUSTRIAL CORP BECKMAN ELECTRONIC TECHNOLOGIES SUB OF EMERSON ELECTRIC	4141 PALM ST	FULLERTON CA 92635
76493	BELL INDUSTRIES INC JW MILLER DIV	19070 REYES AVE PO BOX 5825	COMPTON CA 90224-5825
76854	OAK SWITCH SYSTEMS INC SUB OF OAK TECHNOLOGY INC	100 S MAIN ST PO BOX 517	CRYSTAL LAKE IL 60014-6201
79727	C-W INDUSTRIES	130 JAMES WAY	SOUTHAMPTON PA 18966-3818

CROSS INDEX - MFR. CODE NUMBER TO MANUFACTURER

Mfr. Code	Manufacturer	Address	City, State, Zip Code
80009	TEKTRONIX INC	14150 SW KARL BRAUN DR PO BOX 500 MS 53-111	BEAVERTON OR 97707-0001
81073	GRAYHILL INC	561 HILLGROVE AVE PO BOX 10373	LA GRANGE IL 60525-5914
91637	DALE ELECTRONICS INC	2064 12TH AVE PO BOX 609	COLUMBUS NE 68601-3632
98291	SEALECTRO CORP BICC ELECTRONICS	40 LINDEMAN DR	TURNBULL CT 06611-4739
TK0961	NEC ELECTRONICS USA INC ELECTRON DIV	401 ELLIS ST PO OBX 7241	MOUNTAIN VIEW CA 94039
TK1345	ZMAN AND ASSOCIATES	7633 S 180TH	KENT WA 98032

Component No.	Tektronix Part No.	Serial/Assembly No. Effective	Dscont	Name & Description	Mfr. Code	Mfr. Part No.
A1	670-1312-01	B020000	B089999	CIRCUIT BD ASSY:LEFT INTERFACE	80009	670-1312-01
A1	670-1312-02	B090000	B099999	CIRCUIT BD ASSY:LEFT INTERFACE	80009	670-1312-02
A1	670-1312-03	B100000	B119999	CIRCUIT BD ASSY:LEFT INTERFACE	80009	670-1312-03
A1	670-1312-04	B120000	B139999	CIRCUIT BD ASSY:LEFT INTERFACE	80009	670-1312-04
A1	670-1312-05	B140000	B153239	CIRCUIT BD ASSY:LEFT INTERFACE	80009	670-1312-05
A1	670-1312-06	B153240		CIRCUIT BD ASSY:LEFT INTFC	80009	670-1312-06
A2	670-1315-01			CIRCUIT BD ASSY:VERTICAL	80009	670-1315-01
A3	670-1311-01	B020000	B029999	CIRCUIT BD ASSY:RIGHT INTERFACE	80009	670-1311-01
A3	670-1311-02	B030000	B049999	CIRCUIT BD ASSY:RIGHT INTERFACE	80009	670-1311-02
A3	670-1311-03	B050000	B089999	CIRCUIT BD ASSY:RIGHT INTERFACE	80009	670-1311-03
A3	670-1311-04	B090000	B099999	CIRCUIT BD ASSY:RIGHT INTERFACE	80009	670-1311-04
A3	670-1311-05	B100000	B100473	CIRCUIT BD ASSY:RIGHT INTERFACE	80009	670-1311-05
A3	670-1311-06	B100474	B110539	CIRCUIT BD ASSY:RIGHT INTERFACE	80009	670-1311-06
A3	670-1311-07	B110540	B119999	CIRCUIT BD ASSY:RIGHT INTERFACE	80009	670-1311-07
A3	670-1311-08	B120000	B153239	CIRCUIT BD ASSY:RIGHT INTERFACE	80009	670-1311-08
A3	670-1311-09	B153240	B154175	CIRCUIT BD ASSY:RIGHT INTERFACE	80009	670-1311-09
A3	670-1311-10	B154176		CIRCUIT BD ASSY:RIGHT INTFC	80009	670-1311-10
A4	670-1314-01	B020000	B039999	CIRCUIT BD ASSY:HORIZONTAL	80009	670-1314-01
A4	670-1314-02	B040000	B079999	CIRCUIT BD ASSY:HORIZONTAL	80009	670-1314-02
A4	670-1314-03	B080000	B089999	CIRCUIT BD ASSY:HORIZONTAL	80009	670-1314-03
A4	670-1314-04	B090000	B099999	CIRCUIT BD ASSY:HORIZONTAL	80009	670-1314-04
A4	670-1314-05	B100000	B139999	CIRCUIT BD ASSY:HORIZONTAL	80009	670-1314-05
A4	670-1314-06	B140000	B155239	CIRCUIT BD ASSY:HORIZONTAL	80009	670-1314-06
A4	670-1314-07	B153240	B153519	CIRCUIT BD ASSY:HORIZONTAL	80009	670-1314-07
A4	670-1314-08	B153520	B159999	CIRCUIT BD ASSY:HORIZONTAL	80009	670-1314-08
A4	670-1314-09	B160000		CIRCUIT BD ASSY:HORIZONTAL	80009	670-1314-09
A5	670-1309-01			CIRCUIT BD ASSY:CABLE	80009	670-1309-01
A6	670-1310-02	B020000	B029999	CIRCUIT BD ASSY:RIGHT INTERFACE	80009	670-1310-02
A6	670-1310-01	B030000	B059999	CIRCUIT BD ASSY:FLOATING CONNECTOR	80009	670-1310-01
A6	670-1310-03	B060000	B153239	CIRCUIT BD ASSY:FLOATING CONNECTOR	80009	670-1310-03
A6	670-1310-04	B153240		CIRCUIT BD ASSY:FLOATING CONNECTOR	80009	670-1310-04
A7	670-1317-00			CIRCUIT BD ASSY:UNITS PER DIVISION SWITCH	80009	670-1317-00
A8	670-1313-00			CIRCUIT BD ASSY:RESOLUTION SWITCH	80009	670-1313-00
A9	670-1316-00			CIRCUIT BD ASSY:SCAN MODE SWITCH	80009	670-1316-00
C127	283-0051-00			CAP,FXD,CER DI:0.0033UF,5%,100V	04222	SR301A332JAA
C134	283-0059-00			CAP,FXD,CER DI:1UF,+80-20%,25V	31433	C330C105M5R5CA
C139	283-0078-00			CAP,FXD,CER DI:0.001UF,20%,500V	59660	0801 547X5F0102M
C149	283-0103-00	B010100	B153239	CAP,FXD,CER DI:180PF,5%,500V	59821	2DDH73L181J
C149	283-0077-00	B153240		CAP,FXD,CER DI:330PF,5%,500V	59660	831-500B331J
C160	283-0026-00			CAP,FXD,CER DI:0.2UF,+80-20%,25V	31433	C330C332JIG5CA
C166	283-0078-00			CAP,FXD,CER DI:0.001UF,20%,500V	59660	0801 547X5F0102M
C201	283-0059-00			CAP,FXD,CER DI:1UF,+80-20%,25V	31433	C330C105M5R5CA
C216	283-0059-00			CAP,FXD,CER DI:1UF,+80-20%,25V	31433	C330C105M5R5CA
C219	281-0623-00			CAP,FXD,CER DI:650PF,5%,500V	52763	2RDPLZ007 650PMO
C221	283-0059-00			CAP,FXD,CER DI:1UF,+80-20%,25V	31433	C330C105M5R5CA
C234	283-0059-00			CAP,FXD,CER DI:1UF,+80-20%,25V	31433	C330C105M5R5CA
C239	283-0110-00			CAP,FXD,CER DI:0.005UF,+80-20%,150V	59660	855-547-E-502Z
C245	283-0059-00			CAP,FXD,CER DI:1UF,+80-20%,25V	31433	C330C105M5R5CA
C256	281-0579-00			CAP,FXD,CER DI:21PF,5%,500V	52763	2RDPLZ007 21POJC
C261	283-0059-00			CAP,FXD,CER DI:1UF,+80-20%,25V	31433	C330C105M5R5CA
C267	283-0059-00			CAP,FXD,CER DI:1UF,+80-20%,25V	31433	C330C105M5R5CA
C270	283-0103-00			CAP,FXD,CER DI:180PF,5%,500V	59821	2DDH73L181J
C271	283-0088-00			CAP,FXD,CER DI:1100PF,5%,500V	59660	801-547B112J
C272	283-0026-00			CAP,FXD,CER DI:0.2UF,+80-20%,25V	31433	C330C332JIG5CA
C273	283-0051-00			CAP,FXD,CER DI:0.0033UF,5%,100V	04222	SR301A332JAA
C274	283-0026-00			CAP,FXD,CER DI:0.2UF,+80-20%,25V	31433	C330C332JIG5CA
C275	281-0097-00			CAP,VAR,AIR DI:9-35PF,200V	33095	53-717-029-D9-35
C276	283-0615-00			CAP,FXD,MICA DI:33PF,5%,500V	00853	D155E330J0

Component No.	Tektronix Part No.	Serial/Assembly No. Effective	Dscont	Name & Description	Mfr. Code	Mfr. Part No.
C341	281-0523-00			CAP,FXD,CER DI:100PF,20%,350V	52763	2RDPLZ007 100PMU
C371	281-0580-00			CAP,FXD,CER DI:470PF,10%,500V	52763	2RDPLZ007 470PMO
C374	281-0512-00			CAP,FXD,CER DI:27PF,+/-2.7PF,500V	52763	2RDPLZ007 27POKC
C377	281-0518-00			CAP,FXD,CER DI:47PF,+/-9.4PF,500V	52763	2RDPLZ007 47POMU
C378	281-0580-00			CAP,FXD,CER DI:470PF,10%,500V	52763	2RDPLZ007 470PMO
C381	281-0580-00			CAP,FXD,CER DI:470PF,10%,500V	52763	2RDPLZ007 470PMO
C387	283-0103-00			CAP,FXD,CER DI:180PF,5%,500V	59821	2DDH73L181J
C388	283-0059-00			CAP,FXD,CER DI:1UF,+80-20%,25V	31433	C330C105M5R5CA
C390	281-0512-00			CAP,FXD,CER DI:27PF,+/-2.7PF,500V	52763	2RDPLZ007 27POKC
C401	283-0059-00			CAP,FXD,CER DI:1UF,+80-20%,25V	31433	C330C105M5R5CA
C501	281-0523-00			CAP,FXD,CER DI:100PF,20%,350V	52763	2RDPLZ007 100PMU
C503	283-0159-00			CAP,FXD,CER DI:18PF,5%,50V	04222	SR155A180JAA
C505	283-0072-01			CAP,FXD,CER DI:0.01UF,+80-20%,200V	59660	8300-201Z5V0103M
C507	283-0159-00	B020000	B129999	CAP,FXD,CER DI:18PF,5%,50V	04222	SR155A180JAA
C507	283-0168-00	B130000		CAP,FXD,CER DI:12PF,5%,100V	05397	C315C120J1G5CA
C508	283-0065-00			CAP,FXD,CER DI:0.001UF,5%,50V	59660	0835-591Y5E0102J
C509	283-0054-00	B020000	B089999	CAP,FXD,CER DI:150PF,5%,200V (NOMINAL VALUE, SELECTED)	59660	855-535 U2J0151J
C511	283-0116-00			CAP,FXD,CER DI:820PF,5%,500V	59660	0801547Y5D0821J
C512	283-0142-00			CAP,FXD,CER DI:0.0027UF,5%,200V	54583	CK45YE2D272J-A
C520	283-0639-00			CAP,FXD,MICA DI:56PF,1%,100V	00853	D155E560F0
C524	283-0072-01			CAP,FXD,CER DI:0.01UF,+80-20%,200V	59660	8300-201Z5V0103M
C525	295-0141-00			CAP SET,MATCHED:0.0099UF,900PF,MATCHED 1%, OA RANGE 3% (FURNISHED AS A SET W/C526)	80009	295-0141-00
C526	----- -----			(FURNISHED AS A SET W/C525)		
C534	283-0111-00			CAP,FXD,CER DI:0.1UF,20%,50V	05397	C330C104M5U1CA
C535	281-0092-00			CAP,VAR,CER DI:9-35PF,200V	33095	53-717-001 D9-35
C540	283-0111-00	B020000	B129999	CAP,FXD,CER DI:0.1UF,20%,50V	05397	C330C104M5U1CA
C540	283-0010-00	B130000		CAP,FXD,CER DI:0.05UF,+80-20%,50V	04222	SR305E503ZAA
C543	283-0065-00			CAP,FXD,CER DI:0.001UF,5%,50V	59660	0835-591Y5E0102J
C546	283-0032-00	B120000		CAP,FXD,CER DI:470PF,5%,500V	59660	831-000-Z5E0471J
C547	283-0028-00	B020000	B089999	CAP,FXD,CER DI:0.0022UF,20%,50V	59660	0805585Y5S0222M
C552	283-0159-00	B010100	B100473	CAP,FXD,CER DI:18PF,5%,50V	04222	SR155A180JAA
C552	283-0175-00	B100474		CAP,FXD,CER DI:10PF,5%,200V	05397	C312C100D2G5CA 8
C554	283-0114-00			CAP,FXD,CER DI:1500PF,5%,200V	59660	805-534-Y5D0152J
C564	281-0525-00			CAP,FXD,CER DI:470PF,+/-94PF,500V	52763	2RDPLZ007 470PMO
C574	281-0501-00			CAP,FXD,CER DI:4.7PF,+/-1PF,500V	59660	301-000S2H0479F
C575	281-0523-00			CAP,FXD,CER DI:100PF,20%,350V	52763	2RDPLZ007 100PMU
C576	281-0523-00			CAP,FXD,CER DI:100PF,20%,350V	52763	2RDPLZ007 100PMU
C578	281-0504-00	B020000	B110539	CAP,FXD,CER DI:10PF,+/-1PF,500V	54583	TCC20CH2H100FYA
C582	281-0605-00			CAP,FXD,CER DI:200PF,10%,500V	59660	301000Y5D201K
C586	283-0072-01			CAP,FXD,CER DI:0.01UF,+80-20%,200V	59660	8300-201Z5V0103M
C592	283-0078-00			CAP,FXD,CER DI:0.001UF,20%,500V	59660	0801 547X5F0102M
C604	283-0078-00	B010100	B153239	CAP,FXD,CER DI:0.001UF,20%,500V	59660	0801 547X5F0102M
C604	281-0812-00	B153240		CAP,FXD,CER DI:1000PF,10%,100V	04222	MA101C102KAA
C608	283-0111-00	B010100	B153239	CAP,FXD,CER DI:0.1UF,20%,50V	05397	C330C104M5U1CA
C608	281-0775-00	B153240	B159999	CAP,FXD,CER DI:0.1UF,20%,50V	04222	MA205E104MAA
C613	283-0111-00	B010100	B153239	CAP,FXD,CER DI:0.1UF,20%,50V	05397	C330C104M5U1CA
C613	281-0775-00	B153240	B159999	CAP,FXD,CER DI:0.1UF,20%,50V	04222	MA205E104MAA
C620	290-0267-00			CAP,FXD,ELCTLT:1UF,20%,35V	05397	T320A105M035AS
C621	290-0301-00			CAP,FXD,ELCTLT:10UF,10%,20V	05397	T110B106K020AS
C624	283-0004-00	B020000	B099999	CAP,FXD,CER DI:0.02UF,+80-20%,150V	59660	855-558Z5V0203Z
C624	283-0208-00	B100000		CAP,FXD,CER DI:0.22UF,10%,200V	04222	SR502C224KAA
C628	283-0059-00			CAP,FXD,CER DI:1UF,+80-20%,25V	31433	C330C105M5R5CA
C651	283-0059-00			CAP,FXD,CER DI:1UF,+80-20%,25V	31433	C330C105M5R5CA
C652	283-0078-00	B010100	B153239	CAP,FXD,CER DI:0.001UF,20%,500V	59660	0801 547X5F0102M
C652	281-0812-00	B153240	B159999	CAP,FXD,CER DI:1000PF,10%,100V	04222	MA101C102KAA

Component No.	Tektronix Part No.	Serial/Assembly No. Effective	Dscont	Name & Description	Mfr. Code	Mfr. Part No.
C657	283-0078-00	B010100	B153239	CAP,FXD,CER DI:0.001UF,20%,500V	59660	0801 547X5F0102M
C657	281-0812-00	B153240	B159999	CAP,FXD,CER DI:1000PF,10%,100V	04222	MA101C102KAA
C673	283-0111-00	B010100	B153239	CAP,FXD,CER DI:0.1UF,20%,50V	05397	C330C104M5U1CA
C673	281-0775-00	B153240		CAP,FXD,CER DI:0.1UF,20%,50V	04222	MA205E104MAA
C678	283-0111-00	B010100	B153239	CAP,FXD,CER DI:0.1UF,20%,50V	05397	C330C104M5U1CA
C678	281-0775-00	B153240	B159999	CAP,FXD,CER DI:0.1UF,20%,50V	04222	MA205E104MAA
C680	283-0111-00	B010100	B153239	CAP,FXD,CER DI:0.1UF,20%,50V	05397	C330C104M5U1CA
C680	281-0775-00	B153240		CAP,FXD,CER DI:0.1UF,20%,50V	04222	MA205E104MAA
C681	283-0111-00	B010100	B153239	CAP,FXD,CER DI:0.1UF,20%,50V	05397	C330C104M5U1CA
C681	281-0775-00	B153240	B159999	CAP,FXD,CER DI:0.1UF,20%,50V	04222	MA205E104MAA
C685	283-0003-00	B010100	B153239	CAP,FXD,CER DI:0.01UF,+80-20%,150V	59821	D103Z40Z5UJDCEX
C685	281-0773-00	B153240		CAP,FXD,CER DI:0.01UF,10%,100V	04222	MA201C103KAA
C686	283-0111-00	B020000	B129999	CAP,FXD,CER DI:0.1UF,20%,50V	05397	C330C104M5U1CA
C686	283-0212-00	B130000	B159999	CAP,FXD,CER DI:2UF,20%,50V	04222	SR405E205MAA
C692	283-0067-00	B090000		CAP,FXD,CER DI:0.001UF,10%,200V	59660	835-515-YSE0102K
C801	283-0004-00			CAP,FXD,CER DI:0.02UF,+80-20%,150V	59660	855-558Z5V0203Z
C802	283-0059-00			CAP,FXD,CER DI:1UF,+80-20%,25V	31433	C330C105M5R5CA
C803	290-0134-00			CAP,FXD,ELCTLT:22UF,20%,15V	05397	T110B226M015AS
C804	290-0134-00			CAP,FXD,ELCTLT:22UF,20%,15V	05397	T110B226M015AS
C805	283-0059-00			CAP,FXD,CER DI:1UF,+80-20%,25V	31433	C330C105M5R5CA
C806	283-0026-00			CAP,FXD,CER DI:0.2UF,+80-20%,25V	31433	C330C332JIG5CA
C807	290-0134-00			CAP,FXD,ELCTLT:22UF,20%,15V	05397	T110B226M015AS
C808	290-0134-00			CAP,FXD,ELCTLT:22UF,20%,15V	05397	T110B226M015AS
C809	283-0059-00			CAP,FXD,CER DI:1UF,+80-20%,25V	31433	C330C105M5R5CA
C810	283-0026-00			CAP,FXD,CER DI:0.2UF,+80-20%,25V	31433	C330C332JIG5CA
C821	283-0059-00			CAP,FXD,CER DI:1UF,+80-20%,25V	31433	C330C105M5R5CA
C829	283-0059-00			CAP,FXD,CER DI:1UF,+80-20%,25V	31433	C330C105M5R5CA
C830	290-0134-00			CAP,FXD,ELCTLT:22UF,20%,15V	05397	T110B226M015AS
C831	290-0134-00			CAP,FXD,ELCTLT:22UF,20%,15V	05397	T110B226M015AS
C832	283-0010-00	B040000		CAP,FXD,CER DI:0.05UF,+80-20%,50V	04222	SR305E503ZAA
C834	290-0327-00			CAP,FXD,ELCTLT:0.56UF,20%,100V	05397	T110A564M100AS
C835	290-0134-00			CAP,FXD,ELCTLT:22UF,20%,15V	05397	T110B226M015AS
C836	290-0134-00			CAP,FXD,ELCTLT:22UF,20%,15V	05397	T110B226M015AS
C839	290-0327-00			CAP,FXD,ELCTLT:0.56UF,20%,100V	05397	T110A564M100AS
C850	290-0135-00			CAP,FXD,ELCTLT:15UF,20%,20V	05397	T110B156M020AS
C852	290-0135-00			CAP,FXD,ELCTLT:15UF,20%,20V	05397	T110B156M020AS
C864	290-0134-00			CAP,FXD,ELCTLT:22UF,20%,15V	05397	T110B226M015AS
C865	283-0065-00	B090000		CAP,FXD,CER DI:0.001UF,5%,50V	59660	0835-591Y5E0102J
C866	290-0134-00			CAP,FXD,ELCTLT:22UF,20%,15V	05397	T110B226M015AS
C870	290-0135-00			CAP,FXD,ELCTLT:15UF,20%,20V	05397	T110B156M020AS
C872	290-0135-00			CAP,FXD,ELCTLT:15UF,20%,20V	05397	T110B156M020AS
C914	283-0150-00			CAP,FXD,CER DI:650PF,5%,200V	59821	2DDH60K651J
C930	283-0116-00	B010100	B153239	CAP,FXD,CER DI:820PF,5%,500V	59660	0801547Y5D0821J
C930	281-0850-00	B153240		CAP,FXD,CER DI:820PF,5%,50VDC	04222	SA101A821JAA
C936	281-0504-00	B010100	B153239	CAP,FXD,CER DI:10PF,+/-1PF,500V	54583	TCC20CH2H100FYA
C936	281-0811-00	B153240		CAP,FXD,CER DI:10PF,10%,100V	04222	MA101A100KAA
C952	283-0078-00	B010100	B153239	CAP,FXD,CER DI:0.001UF,20%,500V	59660	0801 547X5F0102M
C952	281-0812-00	B153240		CAP,FXD,CER DI:1000PF,10%,100V	04222	MA101C102KAA
C953	283-0004-00	B010100	B153239	CAP,FXD,CER DI:0.02UF,+80-20%,150V	59660	855-558Z5V0203Z
C953	281-0774-00	B153240		CAP,FXD,CER DI:0.022MFD,20%,100V	04222	MA201E223MAA
CR128	152-0141-02			SEMICOND DVC,DI:SW,SI,30V,150MA,30V,DO-35	03508	DA2527 (1N4152)
CR201	152-0141-02			SEMICOND DVC,DI:SW,SI,30V,150MA,30V,DO-35	03508	DA2527 (1N4152)
CR206	152-0141-02			SEMICOND DVC,DI:SW,SI,30V,150MA,30V,DO-35	03508	DA2527 (1N4152)
CR224	152-0141-02			SEMICOND DVC,DI:SW,SI,30V,150MA,30V,DO-35	03508	DA2527 (1N4152)
CR226	152-0141-02			SEMICOND DVC,DI:SW,SI,30V,150MA,30V,DO-35	03508	DA2527 (1N4152)
CR232	152-0141-02			SEMICOND DVC,DI:SW,SI,30V,150MA,30V,DO-35	03508	DA2527 (1N4152)
CR236	152-0141-02			SEMICOND DVC,DI:SW,SI,30V,150MA,30V,DO-35	03508	DA2527 (1N4152)
CR237	152-0323-00			SEMICOND DVC,DI:SW,SI,35V,0.1A,DO-7	14433	WG1518

Component No.	Tektronix Part No.	Serial/Assembly No. Effective	Dscont	Name & Description	Mfr. Code	Mfr. Part No.
CR238	152-0141-02			SEMICOND DVC,DI:SW,SI,30V,150MA,30V,DO-35	03508	DA2527 (1N4152)
CR239	152-0323-00			SEMICOND DVC,DI:SW,SI,35V,0.1A,DO-7	14433	WG1518
CR242	152-0141-02			SEMICOND DVC,DI:SW,SI,30V,150MA,30V,DO-35	03508	DA2527 (1N4152)
CR257	152-0141-02			SEMICOND DVC,DI:SW,SI,30V,150MA,30V,DO-35	03508	DA2527 (1N4152)
CR259	152-0141-02			SEMICOND DVC,DI:SW,SI,30V,150MA,30V,DO-35	03508	DA2527 (1N4152)
CR272	152-0323-00			SEMICOND DVC,DI:SW,SI,35V,0.1A,DO-7	14433	WG1518
CR274	152-0323-00			SEMICOND DVC,DI:SW,SI,35V,0.1A,DO-7	14433	WG1518
CR314	152-0141-02			SEMICOND DVC,DI:SW,SI,30V,150MA,30V,DO-35	03508	DA2527 (1N4152)
CR370	152-0141-02			SEMICOND DVC,DI:SW,SI,30V,150MA,30V,DO-35	03508	DA2527 (1N4152)
CR374	152-0141-02			SEMICOND DVC,DI:SW,SI,30V,150MA,30V,DO-35	03508	DA2527 (1N4152)
CR378	152-0141-02			SEMICOND DVC,DI:SW,SI,30V,150MA,30V,DO-35	03508	DA2527 (1N4152)
CR385	152-0141-02			SEMICOND DVC,DI:SW,SI,30V,150MA,30V,DO-35	03508	DA2527 (1N4152)
CR392	152-0141-02			SEMICOND DVC,DI:SW,SI,30V,150MA,30V,DO-35	03508	DA2527 (1N4152)
CR394	152-0141-02			SEMICOND DVC,DI:SW,SI,30V,150MA,30V,DO-35	03508	DA2527 (1N4152)
CR406	152-0141-02			SEMICOND DVC,DI:SW,SI,30V,150MA,30V,DO-35	03508	DA2527 (1N4152)
CR418	152-0141-02			SEMICOND DVC,DI:SW,SI,30V,150MA,30V,DO-35	03508	DA2527 (1N4152)
CR422	152-0141-02			SEMICOND DVC,DI:SW,SI,30V,150MA,30V,DO-35	03508	DA2527 (1N4152)
CR423	152-0141-02			SEMICOND DVC,DI:SW,SI,30V,150MA,30V,DO-35	03508	DA2527 (1N4152)
CR424	152-0141-02			SEMICOND DVC,DI:SW,SI,30V,150MA,30V,DO-35	03508	DA2527 (1N4152)
CR425	152-0141-02			SEMICOND DVC,DI:SW,SI,30V,150MA,30V,DO-35	03508	DA2527 (1N4152)
CR429	152-0141-02			SEMICOND DVC,DI:SW,SI,30V,150MA,30V,DO-35	03508	DA2527 (1N4152)
CR505	152-0141-02			SEMICOND DVC,DI:SW,SI,30V,150MA,30V,DO-35	03508	DA2527 (1N4152)
CR510	152-0141-02			SEMICOND DVC,DI:SW,SI,30V,150MA,30V,DO-35	03508	DA2527 (1N4152)
CR512	152-0141-02			SEMICOND DVC,DI:SW,SI,30V,150MA,30V,DO-35	03508	DA2527 (1N4152)
CR518	152-0322-00	B020000	B099999	SEMICOND DVC,DI:SCHOTTKY,SI,15V,1.2PF,DO-35	50434	5082-2672
CR519	152-0322-00	B020000	B099999	SEMICOND DVC,DI:SCHOTTKY,SI,15V,1.2PF,DO-35	50434	5082-2672
CR520	152-0141-02	B090000		SEMICOND DVC,DI:SW,SI,30V,150MA,30V,DO-35	03508	DA2527 (1N4152)
CR532	152-0141-02	B010100	B153239	SEMICOND DVC,DI:SW,SI,30V,150MA,30V,DO-35	03508	DA2527 (1N4152)
CR532	152-0322-00	B153240		SEMICOND DVC,DI:SCHOTTKY,SI,15V,1.2PF,DO-35	50434	5082-2672
CR534	152-0141-02	B010100	B153239	SEMICOND DVC,DI:SW,SI,30V,150MA,30V,DO-35	03508	DA2527 (1N4152)
CR534	152-0322-00	B153240		SEMICOND DVC,DI:SCHOTTKY,SI,15V,1.2PF,DO-35	50434	5082-2672
CR538	152-0153-00	B020000	B079999	SEMICOND DVC,DI:SW,SI,10V,50MA,.DO-7	07263	FD7003
CR538	152-0153-01	B080000	B110539	SEMICOND DVC,DI:SW,SI,10V,DO-35	80009	152-0153-01
CR538	152-0322-00	B110540		SEMICOND DVC,DI:SCHOTTKY,SI,15V,1.2PF,DO-35	50434	5082-2672
CR539	152-0153-00	B020000	B079999	SEMICOND DVC,DI:SW,SI,10V,50MA,.DO-7	07263	FD7003
CR539	152-0153-01	B080000	B110539	SEMICOND DVC,DI:SW,SI,10V,DO-35	80009	152-0153-01
CR539	152-0322-00	B110540		SEMICOND DVC,DI:SCHOTTKY,SI,15V,1.2PF,DO-35	50434	5082-2672
CR540	152-0141-02	B090000		SEMICOND DVC,DI:SW,SI,30V,150MA,30V,DO-35	03508	DA2527 (1N4152)
CR543	152-0141-02			SEMICOND DVC,DI:SW,SI,30V,150MA,30V,DO-35	03508	DA2527 (1N4152)
CR554	152-0141-02			SEMICOND DVC,DI:SW,SI,30V,150MA,30V,DO-35	03508	DA2527 (1N4152)
CR576	152-0141-02			SEMICOND DVC,DI:SW,SI,30V,150MA,30V,DO-35	03508	DA2527 (1N4152)
CR604	152-0141-02			SEMICOND DVC,DI:SW,SI,30V,150MA,30V,DO-35	03508	DA2527 (1N4152)
CR606	152-0141-02			SEMICOND DVC,DI:SW,SI,30V,150MA,30V,DO-35	03508	DA2527 (1N4152)
CR610	152-0141-02			SEMICOND DVC,DI:SW,SI,30V,150MA,30V,DO-35	03508	DA2527 (1N4152)
CR619	152-0141-02			SEMICOND DVC,DI:SW,SI,30V,150MA,30V,DO-35	03508	DA2527 (1N4152)
CR620	152-0141-02			SEMICOND DVC,DI:SW,SI,30V,150MA,30V,DO-35	03508	DA2527 (1N4152)
CR623	152-0141-02			SEMICOND DVC,DI:SW,SI,30V,150MA,30V,DO-35	03508	DA2527 (1N4152)
CR628	152-0141-02			SEMICOND DVC,DI:SW,SI,30V,150MA,30V,DO-35	03508	DA2527 (1N4152)
CR629	152-0141-02			SEMICOND DVC,DI:SW,SI,30V,150MA,30V,DO-35	03508	DA2527 (1N4152)
CR631	152-0141-02			SEMICOND DVC,DI:SW,SI,30V,150MA,30V,DO-35	03508	DA2527 (1N4152)
CR632	152-0141-02			SEMICOND DVC,DI:SW,SI,30V,150MA,30V,DO-35	03508	DA2527 (1N4152)
CR637	152-0141-02			SEMICOND DVC,DI:SW,SI,30V,150MA,30V,DO-35	03508	DA2527 (1N4152)
CR639	152-0141-02			SEMICOND DVC,DI:SW,SI,30V,150MA,30V,DO-35	03508	DA2527 (1N4152)
CR640	152-0141-02	B080000		SEMICOND DVC,DI:SW,SI,30V,150MA,30V,DO-35	03508	DA2527 (1N4152)
CR681	152-0141-02	B010100	B159999	SEMICOND DVC,DI:SW,SI,30V,150MA,30V,DO-35	03508	DA2527 (1N4152)
CR686	152-0141-02	B010100	B159999	SEMICOND DVC,DI:SW,SI,30V,150MA,30V,DO-35	03508	DA2527 (1N4152)
CR687	152-0141-02	B020000	B099999	SEMICOND DVC,DI:SW,SI,30V,150MA,30V,DO-35	03508	DA2527 (1N4152)
CR689	152-0233-00	B090000		SEMICOND DVC,DI:SW,SI,80V,75MA,DO-7	03508	DA2737

Component No.	Tektronix Part No.	Serial/Assembly No. Effective	Dscont	Name & Description	Mfr. Code	Mfr. Part No.
CR692	152-0141-02	B100000		SEMICOND DVC,DI:SW,SI,30V,150MA,30V,DO-35	03508	DA2527 (1N4152)
CR769	152-0141-02			SEMICOND DVC,DI:SW,SI,30V,150MA,30V,DO-35	03508	DA2527 (1N4152)
CR771	152-0141-02			SEMICOND DVC,DI:SW,SI,30V,150MA,30V,DO-35	03508	DA2527 (1N4152)
CR772	152-0141-02			SEMICOND DVC,DI:SW,SI,30V,150MA,30V,DO-35	03508	DA2527 (1N4152)
CR773	152-0141-02			SEMICOND DVC,DI:SW,SI,30V,150MA,30V,DO-35	03508	DA2527 (1N4152)
CR775	152-0141-02			SEMICOND DVC,DI:SW,SI,30V,150MA,30V,DO-35	03508	DA2527 (1N4152)
CR824	152-0141-02			SEMICOND DVC,DI:SW,SI,30V,150MA,30V,DO-35	03508	DA2527 (1N4152)
CR825	152-0141-02			SEMICOND DVC,DI:SW,SI,30V,150MA,30V,DO-35	03508	DA2527 (1N4152)
CR901	152-0141-02			SEMICOND DVC,DI:SW,SI,30V,150MA,30V,DO-35	03508	DA2527 (1N4152)
CR902	152-0141-02			SEMICOND DVC,DI:SW,SI,30V,150MA,30V,DO-35	03508	DA2527 (1N4152)
CR903	152-0141-02			SEMICOND DVC,DI:SW,SI,30V,150MA,30V,DO-35	03508	DA2527 (1N4152)
CR907	152-0141-02			SEMICOND DVC,DI:SW,SI,30V,150MA,30V,DO-35	03508	DA2527 (1N4152)
CR916	152-0141-02			SEMICOND DVC,DI:SW,SI,30V,150MA,30V,DO-35	03508	DA2527 (1N4152)
CR921	152-0141-02			SEMICOND DVC,DI:SW,SI,30V,150MA,30V,DO-35	03508	DA2527 (1N4152)
CR925	152-0141-02			SEMICOND DVC,DI:SW,SI,30V,150MA,30V,DO-35	03508	DA2527 (1N4152)
CR926	152-0141-02			SEMICOND DVC,DI:SW,SI,30V,150MA,30V,DO-35	03508	DA2527 (1N4152)
CR932	152-0141-02			SEMICOND DVC,DI:SW,SI,30V,150MA,30V,DO-35	03508	DA2527 (1N4152)
CR936	152-0141-02			SEMICOND DVC,DI:SW,SI,30V,150MA,30V,DO-35	03508	DA2527 (1N4152)
DS304	150-0048-01			LAMP,INCAND:5V,0.06A,#683,AGED & SEL	58854	683AS15
DS630	150-0102-01			LAMP,INCAND:5V,0.06A,#6832,WIRE LD	71744	6832AS15
DS632	150-0102-01			LAMP,INCAND:5V,0.06A,#6832,WIRE LD	71744	6832AS15
DS640	150-0048-01			LAMP,INCAND:5V,0.06A,#683,AGED & SEL	58854	683AS15
J1	131-0990-00			CONN,RCPT,ELEC:CKT BD,36/72 CONT	05574	000201-5433
J2	131-0990-00			CONN,RCPT,ELEC:CKT BD,36/72 CONT	05574	000201-5433
J3	131-0990-00			CONN,RCPT,ELEC:CKT BD,36/72 CONT	05574	000201-5433
J4	131-0990-00			CONN,RCPT,ELEC:CKT BD,36/72 CONT	05574	000201-5433
J101	131-0410-00			CONN,RCPT,ELEC:COAXIAL CONTACTS,RTANG PLUG	13556	DM53741-5001
J120	131-0581-00			CONN,RCPT,ELEC:EDGECARD,6/12 CONT,0.156 SP	23880	MMM6D/1-2TX
J166	131-0779-00			JACK,TIP:U/W 0.08 OD TEST POINT	98291	0168010000208
J269	131-0779-00			JACK,TIP:U/W 0.08 OD TEST POINT	98291	0168010000208
J500	131-0410-00			CONN,RCPT,ELEC:COAXIAL CONTACTS,RTANG PLUG	13556	DM53741-5001
J501	131-0391-00			CONN,RCPT,ELEC:SNAP-ON,MALE	24931	32JR105-1
J520	131-0581-00			CONN,RCPT,ELEC:EDGECARD,6/12 CONT,0.156 SP	23880	MMM6D/1-2TX
J601	131-0779-00			JACK,TIP:U/W 0.08 OD TEST POINT	98291	0168010000208
J640	131-0779-00			JACK,TIP:U/W 0.08 OD TEST POINT	98291	0168010000208
L268	120-0402-00			XFMR,TOROID:	80009	120-0402-00
L427	108-0440-00	B090000		COIL,RF:FIXED,8UH	80009	108-0440-00
L437	108-0440-00	B090000		COIL,RF:FIXED,8UH	80009	108-0440-00
L693	120-0382-00	B090000		COIL,RF:210UH,+28%-43%,14 TURNS	80009	120-0382-00
L803	120-0382-00			COIL,RF:210UH,+28%-43%,14 TURNS	80009	120-0382-00
L804	120-0382-00			COIL,RF:210UH,+28%-43%,14 TURNS	80009	120-0382-00
L807	120-0382-00			COIL,RF:210UH,+28%-43%,14 TURNS	80009	120-0382-00
L808	120-0382-00			COIL,RF:210UH,+28%-43%,14 TURNS	80009	120-0382-00
L829	120-0382-00			COIL,RF:210UH,+28%-43%,14 TURNS	80009	120-0382-00
L831	120-0382-00			COIL,RF:210UH,+28%-43%,14 TURNS	80009	120-0382-00
L835	120-0382-00			COIL,RF:210UH,+28%-43%,14 TURNS	80009	120-0382-00
L837	120-0382-00			COIL,RF:210UH,+28%-43%,14 TURNS	80009	120-0382-00
L839	120-0382-00			COIL,RF:210UH,+28%-43%,14 TURNS	80009	120-0382-00
L850	120-0382-00			COIL,RF:210UH,+28%-43%,14 TURNS	80009	120-0382-00
L852	120-0382-00	B010100	B153239	COIL,RF:210UH,+28%-43%,14 TURNS	80009	120-0382-00
L852	108-0538-00	B153240		COIL,RF:FIXED,2.7UH	76493	JWM#B7059
L854	108-0440-00	B090000		COIL,RF:FIXED,8UH	80009	108-0440-00
L856	108-0440-00	B090000		COIL,RF:FIXED,8UH	80009	108-0440-00
L862	120-0382-00			COIL,RF:210UH,+28%-43%,14 TURNS	80009	120-0382-00
L870	120-0382-00			COIL,RF:210UH,+28%-43%,14 TURNS	80009	120-0382-00
L872	120-0382-00			COIL,RF:210UH,+28%-43%,14 TURNS	80009	120-0382-00
LR834	108-0114-00	B140000		COIL,RF:FIXED,5.2UH	TK1345	108-0114-00
LR839	108-0114-00	B140000		COIL,RF:FIXED,5.2UH	TK1345	108-0114-00

Component No.	Tektronix Part No.	Serial/Assembly No. Effective	Dscont	Name & Description	Mfr. Code	Mfr. Part No.
P501	131-0375-00			CONN,PLUG,ELEC:SNAP-ON FEMALE	24931	32P-111-1
P956	131-1003-00	B153240		CONN,RCPT,ELEC:CKT BD MT,3 PRONG	80009	131-1003-00
Q123	151-0192-00			TRANSISTOR:NPN,SI,TO-92	04713	SPS8801
Q128	151-0188-00			TRANSISTOR:PNP,SI,TO-92	80009	151-0188-00
Q133	151-0190-01			TRANSISTOR:NPN,SI,TO-92	80009	151-0190-01
Q136	151-0188-00			TRANSISTOR:PNP,SI,TO-92	80009	151-0188-00
Q163	151-0190-01			TRANSISTOR:NPN,SI,TO-92	80009	151-0190-01
Q204	151-0190-01			TRANSISTOR:NPN,SI,TO-92	80009	151-0190-01
Q208	151-0190-01			TRANSISTOR:NPN,SI,TO-92	80009	151-0190-01
Q212	151-0190-01			TRANSISTOR:NPN,SI,TO-92	80009	151-0190-01
Q214	151-0188-00			TRANSISTOR:PNP,SI,TO-92	80009	151-0188-00
Q242	151-1007-00			TRANSISTOR:FET,N-CHAN,SI,TO-71	22229	FD1121
Q252	151-0261-00			TRANSISTOR:PNP,SI,TO-77	80009	151-0261-00
Q256	151-0188-00			TRANSISTOR:PNP,SI,TO-92	80009	151-0188-00
Q262	151-0190-01			TRANSISTOR:NPN,SI,TO-92	80009	151-0190-01
Q266	151-0188-00			TRANSISTOR:PNP,SI,TO-92	80009	151-0188-00
Q314	151-0192-00			TRANSISTOR:NPN,SI,TO-92	04713	SPS8801
Q334	151-0192-00			TRANSISTOR:NPN,SI,TO-92	04713	SPS8801
Q344	151-0216-00			TRANSISTOR:PNP,SI,TO-92	04713	SPS8803
Q354	151-0216-00			TRANSISTOR:PNP,SI,TO-92	04713	SPS8803
Q362	151-0216-00			TRANSISTOR:PNP,SI,TO-92	04713	SPS8803
Q366	151-0216-00			TRANSISTOR:PNP,SI,TO-92	04713	SPS8803
Q370	151-0225-00			TRANSISTOR:NPN,SI,TO-106	04713	SPS7890
Q382	151-0188-00			TRANSISTOR:PNP,SI,TO-92	80009	151-0188-00
Q386	151-0190-01			TRANSISTOR:NPN,SI,TO-92	80009	151-0190-01
Q394	151-0188-00			TRANSISTOR:PNP,SI,TO-92	80009	151-0188-00
Q402	151-0188-00			TRANSISTOR:PNP,SI,TO-92	80009	151-0188-00
Q406	151-0190-01			TRANSISTOR:NPN,SI,TO-92	80009	151-0190-01
Q408	151-0188-00			TRANSISTOR:PNP,SI,TO-92	80009	151-0188-00
Q412	151-0188-00			TRANSISTOR:PNP,SI,TO-92	80009	151-0188-00
Q416	151-0254-00			TRANSISTOR:DARLINGTON,NPN,SI,625MW,TO-92	03508	X38L3118
Q417	151-0190-01			TRANSISTOR:NPN,SI,TO-92	80009	151-0190-01
Q418	151-0190-01			TRANSISTOR:NPN,SI,TO-92	80009	151-0190-01
Q504	151-0188-00			TRANSISTOR:PNP,SI,TO-92	80009	151-0188-00
Q506	151-0190-01			TRANSISTOR:NPN,SI,TO-92	80009	151-0190-01
Q508	151-0225-00			TRANSISTOR:NPN,SI,TO-106	04713	SPS7890
Q510	151-0188-00			TRANSISTOR:PNP,SI,TO-92	80009	151-0188-00
Q514	151-0190-01			TRANSISTOR:NPN,SI,TO-92	80009	151-0190-01
Q516	151-0190-01			TRANSISTOR:NPN,SI,TO-92	80009	151-0190-01
Q518	151-0221-00	B020000	B099999	TRANSISTOR:PNP,SI,TO-92	80009	151-0221-00
Q518	151-0325-00	B100000		TRANSISTOR:PNP,SI,TO-92,SEL	80009	151-0325-00
Q520	151-0221-00	B020000	B099999	TRANSISTOR:PNP,SI,TO-92	80009	151-0221-00
Q520	151-0325-00	B100000		TRANSISTOR:PNP,SI,TO-92,SEL	80009	151-0325-00
Q522	151-0225-00	B020000	B099999	TRANSISTOR:NPN,SI,TO-106	04713	SPS7890
Q522	151-0441-00	B100000	B154175	TRANSISTOR:NPN,SI,TO-72	04713	SRF501
Q522	151-0225-00	B154176		TRANSISTOR:NPN,SI,TO-106	04713	SPS7890
Q532	151-0192-00			TRANSISTOR:NPN,SI,TO-92	04713	SPS8801
Q534	151-0192-00			TRANSISTOR:NPN,SI,TO-92	04713	SPS8801
Q538	151-0192-00			TRANSISTOR:NPN,SI,TO-92	04713	SPS8801
Q540	151-0192-00			TRANSISTOR:NPN,SI,TO-92	04713	SPS8801
Q542	151-0190-01			TRANSISTOR:NPN,SI,TO-92	80009	151-0190-01
Q546	151-0188-00	B020000	B089999	TRANSISTOR:PNP,SI,TO-92	80009	151-0188-00
Q546	151-0301-00	B090000		TRANSISTOR:PNP,SI,TO-18	04713	ST898
Q552	151-0271-00			TRANSISTOR:PNP,SI,TO-92	04713	SPS8236
Q556	151-0269-00	B020000	B079999	TRANSISTOR:NPN,SI,TO-92	TK0961	41632BD
Q556	151-0441-01	B080000		TRANSISTOR:NPN,SI	80009	151-0441-01
Q566	151-0220-00	B020000	B099999	TRANSISTOR:PNP,SI,TO-92	80009	151-0220-00
Q566	151-0325-00	B100000		TRANSISTOR:PNP,SI,TO-92,SEL	80009	151-0325-00

Component No.	Tektronix Part No.	Serial/Assembly No. Effective	Dscont	Name & Description	Mfr. Code	Mfr. Part No.
Q568	151-0220-00	B020000	B099999	TRANSISTOR:PNP,SI,TO-92	80009	151-0220-00
Q568	151-0325-00	B100000		TRANSISTOR:PNP,SI,TO-92,SEL	80009	151-0325-00
Q574	151-0190-01			TRANSISTOR:NPN,SI,TO-92	80009	151-0190-01
Q576	151-0188-00			TRANSISTOR:PNP,SI,TO-92	80009	151-0188-00
Q580	151-0188-00			TRANSISTOR:PNP,SI,TO-92	80009	151-0188-00
Q610	151-0164-00	B010100	B159999	TRANSISTOR:PNP,SI,TO-92	04713	2N2907A
Q614	151-0190-01			TRANSISTOR:NPN,SI,TO-92	80009	151-0190-01
Q620	151-1021-00			TRANSISTOR:FET,N-CHAN,SI,TO-18	80009	151-1021-00
Q624	151-0219-00			TRANSISTOR:PNP,SI,R-124	07263	S022650
Q626	151-0220-00			TRANSISTOR:PNP,SI,TO-92	80009	151-0220-00
Q634	151-0188-00			TRANSISTOR:PNP,SI,TO-92	80009	151-0188-00
Q636	151-0188-00			TRANSISTOR:PNP,SI,TO-92	80009	151-0188-00
Q638	151-0190-01			TRANSISTOR:NPN,SI,TO-92	80009	151-0190-01
Q640	151-1025-00			TRANSISTOR:FET,N-CHAN,SI,TO-92	04713	SPF3036
Q645	151-0188-00			TRANSISTOR:PNP,SI,TO-92	80009	151-0188-00
Q646	151-0302-00	B080000		TRANSISTOR:NPN,SI,TO-18	04713	ST899
Q650	151-0164-00	B010100	B159999	TRANSISTOR:PNP,SI,TO-92	04713	2N2907A
Q660	151-0224-00			TRANSISTOR:NPN,SI,TO-92	04713	SPS6917
Q661	151-0188-00			TRANSISTOR:PNP,SI,TO-92	80009	151-0188-00
Q662	151-0188-00			TRANSISTOR:PNP,SI,TO-92	80009	151-0188-00
Q680	151-0164-00	B010100	B159999	TRANSISTOR:PNP,SI,TO-92	04713	2N2907A
Q682	151-0224-00	B010100	B159999	TRANSISTOR:NPN,SI,TO-92	04713	SPS6917
Q686	151-0164-00	B010100	B159999	TRANSISTOR:PNP,SI,TO-92	04713	2N2907A
Q690	151-0190-01			TRANSISTOR:NPN,SI,TO-92	80009	151-0190-01
Q692	151-0190-00	B090000		TRANSISTOR:NPN,SI,TO-92	80009	151-0190-00
Q694	151-0301-00	B100000		TRANSISTOR:PNP,SI,TO-18	04713	ST898
Q695	151-0188-00			TRANSISTOR:PNP,SI,TO-92	80009	151-0188-00
Q824	151-0261-00			TRANSISTOR:PNP,SI,TO-77	80009	151-0261-00
Q826	151-0134-00			TRANSISTOR:PNP,SI,TO-39	04713	SM3195
Q850	151-0188-00	B060000		TRANSISTOR:PNP,SI,TO-92	80009	151-0188-00
Q903	151-0190-01			TRANSISTOR:NPN,SI,TO-92	80009	151-0190-01
Q906	151-0188-00			TRANSISTOR:PNP,SI,TO-92	80009	151-0188-00
Q914	151-0190-01			TRANSISTOR:NPN,SI,TO-92	80009	151-0190-01
Q925	151-1025-00			TRANSISTOR:FET,N-CHAN,SI,TO-92	04713	SPF3036
Q930	151-0188-00			TRANSISTOR:PNP,SI,TO-92	80009	151-0188-00
Q932	151-0188-00			TRANSISTOR:PNP,SI,TO-92	80009	151-0188-00
Q936	151-1021-00			TRANSISTOR:FET,N-CHAN,SI,TO-18	80009	151-1021-00
Q940	151-1007-00			TRANSISTOR:FET,N-CHAN,SI,TO-71	22229	FD1121
Q954	151-1025-00			TRANSISTOR:FET,N-CHAN,SI,TO-92	04713	SPF3036
Q960	151-1025-00			TRANSISTOR:FET,N-CHAN,SI,TO-92	04713	SPF3036
R101	317-0510-00			RES,FXD,CMPSN:51 OHM,5%,0.125W	01121	BB5105
R121	321-0093-00			RES,FXD,FILM:90.9 OHM,1%,0.125W,TC=T0	19701	5043ED90R90F
R123	315-0183-00			RES,FXD,FILM:18K OHM,5%,0.25W	19701	5043CX18K00J
R125	315-0752-00			RES,FXD,FILM:7.5K OHM,5%,0.25W	57668	NTR25J-E07K5
R127	321-0154-00			RES,FXD,FILM:392 OHM,1%,0.125W,TC=T0	07716	CEAD392R0F
R129	315-0512-00			RES,FXD,FILM:5.1K OHM,5%,0.25W	57668	NTR25J-E05K1
R130	315-0101-00			RES,FXD,FILM:100 OHM,5%,0.25W	57668	NTR25J-E 100E
R133	315-0101-00			RES,FXD,FILM:100 OHM,5%,0.25W	57668	NTR25J-E 100E
R134	315-0153-00			RES,FXD,FILM:15K OHM,5%,0.25W	19701	5043CX15K00J
R135	315-0153-00			RES,FXD,FILM:15K OHM,5%,0.25W	19701	5043CX15K00J
R136	315-0101-00			RES,FXD,FILM:100 OHM,5%,0.25W	57668	NTR25J-E 100E
R137	315-0101-00			RES,FXD,FILM:100 OHM,5%,0.25W	57668	NTR25J-E 100E
R138	321-0263-00			RES,FXD,FILM:5.36K OHM,1%,0.125W,TC=T0	07716	CEAD53600F
R145	321-0193-00			RES,FXD,FILM:1K OHM,1%,0.125W,TC=T0 (R145A ONLY)	19701	5033ED1K00F
R145	321-0231-00			RES,FXD,FILM:2.49K OHM,1%,0.125W,TC=T0 (R145B ONLY)	19701	5033ED2K49F
R145	321-0260-00			RES,FXD,FILM:4.99K OHM,1%,0.125W,TC=T0 (R145C ONLY)	19701	5033ED4K990F

Component No.	Tektronix Part No.	Serial/Assembly No. Effective	Dscont	Name & Description	Mfr. Code	Mfr. Part No.
R145	321-0289-00			RES,FXD,FILM:10.0K OHM,1%,0.125W,TC=T0 (R145D ONLY)	19701	5033ED10K0F
R145	321-0327-00			RES,FXD,FILM:24.9K OHM,1%,0.125W,TC=T0 (R145E ONLY)	07716	CEAD24901F
R145	321-0356-00			RES,FXD,FILM:49.9K OHM,1%,0.125W,TC=T0 (R145F ONLY)	19701	5033ED49K90F
R145	321-0385-00			RES,FXD,FILM:100K OHM,1%,0.125W,TC=T0 (R145G ONLY)	19701	5033ED100K0F
R145	321-0423-00			RES,FXD,FILM:249K OHM,1%,0.125W,TC=T0 (R145H ONLY)	19701	5043ED249K0F
R147	321-0314-01			RES,FXD,FILM:18.2K OHM,0.5%,0.125W,TC=T0 (R147A ONLY)	19701	5033RD18K20D
R147	321-0905-01			RES,FXD,FILM:121.4K OHM,0.5%,0.125W,TC=T0 (R147B ONLY)	19701	5033RD121K4D
R147	321-0898-01			RES,FXD,FILM:466K OHM,0.5%,0.125W,TC=T0 (R147C ONLY)	24546	NA4D4663D
R147	321-0899-01			RES,FXD,FILM:233.2K OHM,0.5%,0.125W,T=T0 (R147D ONLY)	19701	5033RD233K2D
R147	321-1391-01			RES,FXD,FILM:117K OHM,0.5%,0.125W,TC=T0 (R147E ONLY)	19701	5033RD117K0D
R147	321-0904-01			RES,FXD,FILM:46.6K OHM,0.5%,0.125W,TC=T0 (R147F ONLY)	19701	5033RD46K60D
R147	321-0903-01			RES,FXD,FILM:23.32K OHM,0.5%,0.125W,TC=T0 (R147G ONLY)	19701	5033RD23K321D
R147	321-1295-01			RES,FXD,FILM:11.7K OHM,0.5%,0.125W,TC=T0 (R147H ONLY)	09969	MFF1816G11701D
R147	321-0902-01			RES,FXD,FILM:4.66K OHM,0.5%,0.125W,TC=T0 (R147I ONLY)	91637	MFF1816G46600D
R149	321-0225-01			RES,FXD,FILM:2.15K OHM,0.5%,0.125W,TC=T0	19701	5033RD2K150D
R151	311-0965-00	B020000	B152384	RESISTOR ASSY:VAR,(2)10K OHM,10%,1W	80009	311-0965-00
R151	311-2196-00	B152385		RES,VAR,WW:PNL,2X10K OHM,5%,1W	32997	84N2AK35J15J15
R153	315-0303-00			RES,FXD,FILM:30K OHM,5%,0.25W	19701	5043CX30K00J
R154	315-0303-00			RES,FXD,FILM:30K OHM,5%,0.25W	19701	5043CX30K00J
R156	315-0471-00			RES,FXD,FILM:470 OHM,5%,0.25W	57668	NTR25J-E470E
R158	315-0621-00			RES,FXD,FILM:620 OHM,5%,0.25W	57668	NTR25J-E620E
R162	315-0101-00			RES,FXD,FILM:100 OHM,5%,0.25W	57668	NTR25J-E 100E
R163	301-0123-00			RES,FXD,FILM:12K OHM,5%,0.5W	19701	5053CX12K00J
R166	321-0289-00			RES,FXD,FILM:10.0K OHM,1%,0.125W,TC=T0	19701	5033ED10K0F
R202	321-0420-00			RES,FXD,FILM:232K OHM,1%,0.125W,TC=T0	07716	CEAD23202F
R204	315-0183-00			RES,FXD,FILM:18K OHM,5%,0.25W	19701	5043CX18K00J
R206	315-0122-00			RES,FXD,FILM:1.2K OHM,5%,0.25W	57668	NTR25J-E01K2
R207	315-0101-00			RES,FXD,FILM:100 OHM,5%,0.25W	57668	NTR25J-E 100E
R208	315-0752-00			RES,FXD,FILM:7.5K OHM,5%,0.25W	57668	NTR25J-E07K5
R209	321-0335-00			RES,FXD,FILM:30.1K OHM,1%,0.125W,TC=T0	57668	RB14FXE30K1
R211	315-0101-00			RES,FXD,FILM:100 OHM,5%,0.25W	57668	NTR25J-E 100E
R212	315-0220-00			RES,FXD,FILM:22 OHM,5%,0.25W	19701	5043CX22R00J
R213	315-0101-00			RES,FXD,FILM:100 OHM,5%,0.25W	57668	NTR25J-E 100E
R214	315-0220-00			RES,FXD,FILM:22 OHM,5%,0.25W	19701	5043CX22R00J
R216	315-0752-00			RES,FXD,FILM:7.5K OHM,5%,0.25W	57668	NTR25J-E07K5
R218	315-0752-00			RES,FXD,FILM:7.5K OHM,5%,0.25W	57668	NTR25J-E07K5
R219	315-0101-00			RES,FXD,FILM:100 OHM,5%,0.25W	57668	NTR25J-E 100E
R221	321-0245-00			RES,FXD,FILM:3.48K OHM,1%,0.125W,TC=T0	19701	5033ED3K48F
R222	321-0245-00			RES,FXD,FILM:3.48K OHM,1%,0.125W,TC=T0	19701	5033ED3K48F
R224	321-0231-00			RES,FXD,FILM:2.49K OHM,1%,0.125W,TC=T0	19701	5033ED2K49F
R226	321-0231-00			RES,FXD,FILM:2.49K OHM,1%,0.125W,TC=T0	19701	5033ED2K49F
R229	315-0102-00			RES,FXD,FILM:1K OHM,5%,0.25W	57668	NTR25JE01K0
R231	315-0102-00			RES,FXD,FILM:1K OHM,5%,0.25W	57668	NTR25JE01K0
R234	315-0100-00			RES,FXD,FILM:10 OHM,5%,0.25W	19701	5043CX10RR00J
R239	315-0510-00			RES,FXD,FILM:51 OHM,5%,0.25W	19701	5043CX51R00J
R242	321-0328-00			RES,FXD,FILM:25.5K OHM,1%,0.125W,TC=T0	19701	5043ED25K50F
R244	321-0254-00			RES,FXD,FILM:4.32K OHM,1%,0.125W,TC=T0	07716	CEAD43200F

Component No.	Tektronix Part No.	Serial/Assembly No. Effective	Dscont	Name & Description	Mfr. Code	Mfr. Part No.
R245	311-1280-00			RES,VAR,NONWW:TRMR,1K OHM,0.5W	32997	3329S-L58-102
R246	321-0254-00			RES,FXD,FILM:4.32K OHM,1%,0.125W,TC=T0	07716	CEAD43200F
R248	315-0475-00			RES,FXD,FILM:4.7M OHM,5%,0.25W	01121	CB4755
R253	315-0101-00			RES,FXD,FILM:100 OHM,5%,0.25W	57668	NTR25J-E 100E
R257	315-0241-00			RES,FXD,FILM:240 OHM,5%,0.25W	19701	5043CX240R0J
R258	315-0241-00			RES,FXD,FILM:240 OHM,5%,0.25W	19701	5043CX240R0J
R259	315-0243-00			RES,FXD,FILM:24K OHM,5%,0.25W	57668	NTR25J-E24K0
R261	315-0101-00			RES,FXD,FILM:100 OHM,5%,0.25W	57668	NTR25J-E 100E
R264	315-0101-00			RES,FXD,FILM:100 OHM,5%,0.25W	57668	NTR25J-E 100E
R266	315-0101-00			RES,FXD,FILM:100 OHM,5%,0.25W	57668	NTR25J-E 100E
R267	315-0101-00			RES,FXD,FILM:100 OHM,5%,0.25W	57668	NTR25J-E 100E
R268	321-0900-03			RES,FXD,FILM:61.5K OHM,0.25%,0.125W,T=T2	19701	5033RC61K500C
R269	321-0901-03			RES,FXD,FILM:11.94K OHM,0.25%,0.125W,T2	07716	CEAC11941C
R271	321-0360-00			RES,FXD,FILM:54.9K OHM,1%,0.125W,TC=T0	19701	5033ED54K90F
R272	315-0331-00			RES,FXD,FILM:330 OHM,5%,0.25W	57668	NTR25J-E330E
R274	315-0331-00			RES,FXD,FILM:330 OHM,5%,0.25W	57668	NTR25J-E330E
R275	321-0360-00			RES,FXD,FILM:54.9K OHM,1%,0.125W,TC=T0	19701	5033ED54K90F
R302	321-0270-00			RES,FXD,FILM:6.34K OHM,1%,0.125W,TC=T0	19701	5043ED6K340F
R303	315-0103-00			RES,FXD,FILM:10K OHM,5%,0.25W	19701	5043CX10K00J
R304	321-0328-00			RES,FXD,FILM:25.5K OHM,1%,0.125W,TC=T0	19701	5043ED25K50F
R305	311-0329-00			RES,VAR,NONWW:PNL,50K OHM,0.5W	01121	W-7356A
R308	315-0472-00			RES,FXD,FILM:4.7K OHM,5%,0.25W	57668	NTR25J-E04K7
R311	321-0193-00			RES,FXD,FILM:1K OHM,1%,0.125W,TC=T0	19701	5033ED1K00F
R312	321-0232-00			RES,FXD,FILM:2.55K OHM,1%,0.125W,TC=T0	19701	5043ED2K550F
R313	315-0512-00			RES,FXD,FILM:5.1K OHM,5%,0.25W	57668	NTR25J-E05K1
R314	321-0205-00			RES,FXD,FILM:1.33K OHM,1%,0.125W,TC=T0	19701	5033ED1K330F
R315	315-0102-00			RES,FXD,FILM:1K OHM,5%,0.25W	57668	NTR25JE01K0
R317	321-0335-00			RES,FXD,FILM:30.1K OHM,1%,0.125W,TC=T0	57668	RB14FXE30K1
R320	311-1147-01			RES,VAR,NONWW:PNL,15K OHM,0.25W,SWITCH (FURNISHED AS A SET W/S320)	80009	311-1147-01
R321	321-0269-00			RES,FXD,FILM:6.19K OHM,1%,0.125W,TC=T0	07716	CEAD61900F
R322	321-0193-00			RES,FXD,FILM:1K OHM,1%,0.125W,TC=T0	19701	5033ED1K00F
R325	311-1282-00			RES,VAR,NONWW:TRMR,5K OHM,0.5W	32997	3329S-L58-502
R326	321-0193-00			RES,FXD,FILM:1K OHM,1%,0.125W,TC=T0	19701	5033ED1K00F
R332	315-0684-00			RES,FXD,FILM:680K OHM,5%,0.25W	01121	CB6845
R333	315-0512-00			RES,FXD,FILM:5.1K OHM,5%,0.25W	57668	NTR25J-E05K1
R334	321-0205-00			RES,FXD,FILM:1.33K OHM,1%,0.125W,TC=T0	19701	5033ED1K330F
R335	311-1287-00			RES,VAR,NONWW:TRMR,100K OHM,0.5W	32997	3329S-L58-104
R336	315-0105-00			RES,FXD,FILM:1M OHM,5%,0.25W	19701	5043CX1M000J
R337	321-0335-00			RES,FXD,FILM:30.1K OHM,1%,0.125W,TC=T0	57668	RB14FXE30K1
R343	321-0238-00			RES,FXD,FILM:2.94K OHM,1%,0.125W,TC=T0	07716	CEAD29400F
R344	321-0108-00			RES,FXD,FILM:130 OHM 1%,0.125W,TC=T0	07716	CEAD13000F
R345	311-0169-00			RES,VAR,NONWW:PNL,100 OHM,0.5W	01121	W-7564B
R346	321-0209-00			RES,FXD,FILM:1.47K OHM,1%,0.125W,TC=T0	19701	5033ED1K47F
R353	321-0238-00			RES,FXD,FILM:2.94K OHM,1%,0.125W,TC=T0	07716	CEAD29400F
R356	321-0209-00			RES,FXD,FILM:1.47K OHM,1%,0.125W,TC=T0	19701	5033ED1K47F
R362	321-0222-00			RES,FXD,FILM:2.00K OHM,1%,0.125W,TC=T0	19701	5033ED2K00F
R363	321-0251-00			RES,FXD,FILM:4.02K OHM,1%,0.125W,TC=T0	19701	5033ED4K020F
R365	321-0251-00			RES,FXD,FILM:4.02K OHM,1%,0.125W,TC=T0	19701	5033ED4K020F
R366	321-0222-00			RES,FXD,FILM:2.00K OHM,1%,0.125W,TC=T0	19701	5033ED2K00F
R368	321-0155-00			RES,FXD,FILM:402 OHM,1%,0.125W,TC=T0	07716	CEAD402R0F
R370	315-0510-00			RES,FXD,FILM:51 OHM,5%,0.25W	19701	5043CX51R00J
R371	315-0102-00			RES,FXD,FILM:1K OHM,5%,0.25W	57668	NTR25JE01K0
R374	315-0122-00			RES,FXD,FILM:1.2K OHM,5%,0.25W	57668	NTR25J-E01K2
R377	315-0222-00			RES,FXD,FILM:2.2K OHM,5%,0.25W	57668	NTR25J-E02K2
R378	315-0204-00			RES,FXD,FILM:200K OHM,5%,0.25W	19701	5043CX200K0J
R380	311-1282-00			RES,VAR,NONWW:TRMR,5K OHM,0.5W	32997	3329S-L58-502
R381	315-0513-00			RES,FXD,FILM:51K OHM,5%,0.25W	57668	NTR25J-E51K0

Component No.	Tektronix Part No.	Serial/Assembly No. Effective	Dscont	Name & Description	Mfr. Code	Mfr. Part No.
R382	315-0101-00			RES,FXD,FILM:100 OHM,5%,0.25W	57668	NTR25J-E 100E
R383	315-0243-00			RES,FXD,FILM:24K OHM,5%,0.25W	57668	NTR25J-E24K0
R384	315-0511-00			RES,FXD,FILM:510 OHM,5%,0.25W	19701	5043CX510R0J
R386	315-0183-00			RES,FXD,FILM:18K OHM,5%,0.25W	19701	5043CX18K00J
R387	315-0472-00			RES,FXD,FILM:4.7K OHM,5%,0.25W	57668	NTR25J-E04K7
R390	311-1283-00			RES,VAR,NONWW:TRMR,10K OHM,0.5W	32997	3329S-L58-103
R391	315-0272-00			RES,FXD,FILM:2.7K OHM,5%,0.25W	57668	NTR25J-E02K7
R392	315-0223-00			RES,FXD,FILM:22K OHM,5%,0.25W	19701	5043CX22K00J92U
R394	315-0331-00			RES,FXD,FILM:330 OHM,5%,0.25W	57668	NTR25J-E330E
R395	315-0432-00			RES,FXD,FILM:4.3K OHM,5%,0.25W	57668	NTR25J-E04K3
R401	315-0683-00			RES,FXD,FILM:68K OHM,5%,0.25W	57668	NTR25J-E68K0
R402	315-0104-00			RES,FXD,FILM:100K OHM,5%,0.25W	57668	NTR25J-E100K
R403	315-0474-00			RES,FXD,FILM:470K OHM,5%,0.25W	19701	5043CX470K0J92U
R404	315-0105-00			RES,FXD,FILM:1M OHM,5%,0.25W	19701	5043CX1M000J
R405	315-0154-00			RES,FXD,FILM:150K OHM,5%,0.25W	57668	NTR25J-E150K
R406	321-0399-00			RES,FXD,FILM:140K OHM,1%,0.125W,TC=T0	07716	CEAD14002F
R408	321-0373-00			RES,FXD,FILM:75.0K OHM,1%,0.125W,TC=T0	19701	5033ED75K00F
R409	315-0105-00			RES,FXD,FILM:1M OHM,5%,0.25W	19701	5043CX1M000J
R410	315-0563-00			RES,FXD,FILM:56K OHM,5%,0.25W	19701	5043CX56K00J
R411	315-0564-00			RES,FXD,FILM:560K OHM,5%,0.25W	19701	5043CX560K0J
R412	321-0402-00			RES,FXD,FILM:150K OHM,1%,0.125W,TC=T0	19701	5033ED150K0F
R413	321-0402-00			RES,FXD,FILM:150K OHM,1%,0.125W,TC=T0	19701	5033ED150K0F
R415	321-0223-00			RES,FXD,FILM:2.05K OHM,1%,0.125W,TC=T0	19701	5033ED2K05F
R416	321-0299-00			RES,FXD,FILM:12.7K OHM,1%,0.125W,TC=T0	19701	5033ED12K70F
R417	321-0346-00			RES,FXD,FILM:39.2K OHM,1%,0.125W,TC=T0	19701	5043ED39K20F
R418	321-0346-00			RES,FXD,FILM:39.2K OHM,1%,0.125W,TC=T0	19701	5043ED39K20F
R419	321-0335-00			RES,FXD,FILM:30.1K OHM,1%,0.125W,TC=T0	57668	RB14FXE30K1
R421	321-0373-00			RES,FXD,FILM:75.0K OHM,1%,0.125W,TC=T0	19701	5033ED75K00F
R422	321-0402-00			RES,FXD,FILM:150K OHM,1%,0.125W,TC=T0	19701	5033ED150K0F
R423	321-0344-00			RES,FXD,FILM:37.4K OHM,1%,0.125W,TC=T0	19701	5033ED 37K40F
R424	321-0373-00			RES,FXD,FILM:75.0K OHM,1%,0.125W,TC=T0	19701	5033ED75K00F
R425	321-0402-00			RES,FXD,FILM:150K OHM,1%,0.125W,TC=T0	19701	5033ED150K0F
R427	321-0373-00			RES,FXD,FILM:75.0K OHM,1%,0.125W,TC=T0	19701	5033ED75K00F
R428	321-0304-00			RES,FXD,FILM:14.3K OHM,1%,0.125W,TC=T0	19701	5033ED14K30F
R429	321-0343-00			RES,FXD,FILM:36.5K OHM,1%,0.125W,TC=T0	07716	CEAD36501F
R431	321-0373-00			RES,FXD,FILM:75.0K OHM,1%,0.125W,TC=T0	19701	5033ED75K00F
R433	321-0356-00			RES,FXD,FILM:49.9K OHM,1%,0.125W,TC=T0	19701	5033ED49K90F
R435	321-0402-00			RES,FXD,FILM:150K OHM,1%,0.125W,TC=T0	19701	5033ED150K0F
R437	321-0356-00			RES,FXD,FILM:49.9K OHM,1%,0.125W,TC=T0	19701	5033ED49K90F
R439	321-0344-00			RES,FXD,FILM:37.4K OHM,1%,0.125W,TC=T0	19701	5033ED 37K40F
R501	315-0222-00			RES,FXD,FILM:2.2K OHM,5%,0.25W	57668	NTR25J-E02K2
R503	315-0103-00			RES,FXD,FILM:10K OHM,5%,0.25W	19701	5043CX10K00J
R504	315-0102-00			RES,FXD,FILM:1K OHM,5%,0.25W	57668	NTR25JE01K0
R505	315-0100-00			RES,FXD,FILM:10 OHM,5%,0.25W	19701	5043CX10RR00J
R506	315-0222-00			RES,FXD,FILM:2.2K OHM,5%,0.25W	57668	NTR25J-E02K2
R507	321-0232-00	B020000	B089999	RES,FXD,FILM:2.55K OHM,1%,0.125W,TC=T0	19701	5043ED2K550F
R507	321-0265-00	B090000		RES,FXD,FILM:5.62K OHM,1%,0.125W,TC=T0	19701	5043ED5K620F
R508	315-0154-00			RES,FXD,FILM:150K OHM,5%,0.25W	57668	NTR25J-E150K
R510	321-0291-00	B020000	B089999	RES,FXD,FILM:10.5K OHM,1%,0.125W,TC=T0	19701	5033ED10K50F
R510	321-0352-00	B090000		RES,FXD,FILM:45.3K OHM,1%,0.125W,TC=T0	07716	CEAD45301F
R512	315-0103-00			RES,FXD,FILM:10K OHM,5%,0.25W	19701	5043CX10K00J
R514	321-0302-00			RES,FXD,FILM:13.7K OHM,1%,0.125W,TC=T0	07716	CEAD 13701F
R515	321-0333-00			RES,FXD,FILM:28.7K OHM,1%,0.125W,TC=T0	19701	5043ED28K70F
R516	321-0293-00			RES,FXD,FILM:11.0K OHM,1%,0.125W,TC=T0	07716	CEAD11001F
R517	315-0124-00	B090000	B119999	RES,FXD,FILM:120K OHM,5%,0.25W	19701	5043CX120K0J
R517	315-0473-00	B120000		RES,FXD,FILM:47K OHM,5%,0.25W	57668	NTR25J-E47K0
R518	315-0622-00			RES,FXD,FILM:6.2K OHM,5%,0.25W	19701	5043CX6K200J
R520	315-0273-00	B020000	B099999	RES,FXD,FILM:27K OHM,5%,0.25W	57668	NTR25J-E27K0

Component No.	Tektronix Part No.	Serial/Assembly No. Effective	Dscont	Name & Description	Mfr. Code	Mfr. Part No.
R520	315-0393-00	B100000		RES,FXD,FILM:39K OHM,5%,0.25W	57668	NTR25J-E39K0
R521	315-0103-00			RES,FXD,FILM:10K OHM,5%,0.25W	19701	5043CX10K00J
R522	315-0101-00			RES,FXD,FILM:100 OHM,5%,0.25W	57668	NTR25J-E 100E
R523	315-0101-00			RES,FXD,FILM:100 OHM,5%,0.25W	57668	NTR25J-E 100E
R524	322-0268-00			RES,FXD,FILM:6.04K OHM,1%,0.25W,TC=T0	19701	5043RD6K040F
R525	311-0609-00			RES,VAR,NONWW:TRMR,2K OHM,0.5W	32997	3329H-L58-202
R526	315-0510-00			RES,FXD,FILM:51 OHM,5%,0.25W	19701	5043CX51R00J
R527	315-0510-00	B100000		RES,FXD,FILM:51 OHM,5%,0.25W	19701	5043CX51R00J
R531	315-0101-00	B100000		RES,FXD,FILM:100 OHM,5%,0.25W	57668	NTR25J-E 100E
R532	301-0163-00			RES,FXD,FILM:16K OHM,5%,0.5W	19701	5053CX16K00J
R534	315-0561-00			RES,FXD,FILM:560 OHM,5%,0.25W	19701	5043CX560R0J
R536	315-0101-00			RES,FXD,FILM:100 OHM,5%,0.25W	57668	NTR25J-E 100E
R537	315-0103-00			RES,FXD,FILM:10K OHM,5%,0.25W	19701	5043CX10K00J
R538	315-0101-00	B100000		RES,FXD,FILM:100 OHM,5%,0.25W	57668	NTR25J-E 100E
R539	301-0163-00			RES,FXD,FILM:16K OHM,5%,0.5W	19701	5053CX16K00J
R540	315-0101-00			RES,FXD,FILM:100 OHM,5%,0.25W	57668	NTR25J-E 100E
R543	315-0752-00	B020000	B049999	RES,FXD,FILM:7.5K OHM,5%,0.25W	57668	NTR25J-E07K5
R543	315-0512-00	B050000		RES,FXD,FILM:5.1K OHM,5%,0.25W	57668	NTR25J-E05K1
R545	315-0303-00			RES,FXD,FILM:30K OHM,5%,0.25W	19701	5043CX30K00J
R546	315-0471-00	B020000	B089999	RES,FXD,FILM:470 OHM,5%,0.25W	57668	NTR25J-E470E
R546	315-0821-00	B090000	B099999	RES,FXD,FILM:820 OHM,5%,0.25W	19701	5043CX820R0J
R546	315-0182-00	B100000	B119999	RES,FXD,FILM:1.8K OHM,5%,0.25W	57668	NTR25J-E1K8
R546	315-0821-00	B120000		RES,FXD,FILM:820 OHM,5%,0.25W	19701	5043CX820R0J
R552	315-0103-00	B020000	B099999	RES,FXD,FILM:10K OHM,5%,0.25W	19701	5043CX10K00J
R552	315-0512-00	B100000		RES,FXD,FILM:5.1K OHM,5%,0.25W	57668	NTR25J-E05K1
R554	315-0154-00			RES,FXD,FILM:150K OHM,5%,0.25W	57668	NTR25J-E150K
R556	315-0622-00			RES,FXD,FILM:6.2K OHM,5%,0.25W	19701	5043CX6K200J
R557	315-0103-00			RES,FXD,FILM:10K OHM,5%,0.25W	19701	5043CX10K00J
R560	315-0102-00			RES,FXD,FILM:1K OHM,5%,0.25W	57668	NTR25JE01K0
R562	315-0102-00			RES,FXD,FILM:1K OHM,5%,0.25W	57668	NTR25JE01K0
R563	315-0103-00	B100000		RES,FXD,FILM:10K OHM,5%,0.25W	19701	5043CX10K00J
R564	315-0102-00			RES,FXD,FILM:1K OHM,5%,0.25W	57668	NTR25JE01K0
R565	315-0200-00			RES,FXD,FILM:20 OHM,5%,0.25W	19701	5043CX20R00J
R566	315-0511-00			RES,FXD,FILM:510 OHM,5%,0.25W	19701	5043CX510R0J
R567	315-0200-00			RES,FXD,FILM:20 OHM,5%,0.25W	19701	5043CX20R00J
R568	315-0511-00			RES,FXD,FILM:510 OHM,5%,0.25W	19701	5043CX510R0J
R572	315-0103-00			RES,FXD,FILM:10K OHM,5%,0.25W	19701	5043CX10K00J
R574	315-0103-00			RES,FXD,FILM:10K OHM,5%,0.25W	19701	5043CX10K00J
R575	315-0103-00			RES,FXD,FILM:10K OHM,5%,0.25W	19701	5043CX10K00J
R576	315-0154-00			RES,FXD,FILM:150K OHM,5%,0.25W	57668	NTR25J-E150K
R578	315-0103-00			RES,FXD,FILM:10K OHM,5%,0.25W	19701	5043CX10K00J
R580	315-0102-00			RES,FXD,FILM:1K OHM,5%,0.25W	57668	NTR25JE01K0
R582	315-0101-00			RES,FXD,FILM:100 OHM,5%,0.25W	57668	NTR25J-E 100E
R584	315-0222-00			RES,FXD,FILM:2.2K OHM,5%,0.25W	57668	NTR25J-E02K2
R586	315-0101-00			RES,FXD,FILM:100 OHM,5%,0.25W	57668	NTR25J-E 100E
R590	311-0607-00			RES,VAR,NONWW:TRMR,10K OHM,0.5W	73138	82-25-2
R592	311-0607-00			RES,VAR,NONWW:TRMR,10K OHM,0.5W	73138	82-25-2
R594	311-0607-00			RES,VAR,NONWW:TRMR,10K OHM,0.5W	73138	82-25-2
R596	321-0193-00	B020000	B099999	RES,FXD,FILM:1K OHM,1%,0.125W,TC=T0	19701	5033ED1K00F
R596	321-0164-00	B100000		RES,FXD,FILM:499 OHM,1%,0.125W,TC=T0	19701	5033ED499R0F
R597	321-0357-00			RES,FXD,FILM:51.1K OHM,1%,0.125W,TC=T0	07716	CEAD51101F
R601	311-1159-00			RES,VAR,NONWW:PNL,100K OHM,1W,W/SW (FURNISHED AS A SET W/S650)	12697	CM40208
R603	321-0289-00			RES,FXD,FILM:10.0K OHM,1%,0.125W,TC=T0	19701	5033ED10K0F
R604	315-0102-00			RES,FXD,FILM:1K OHM,5%,0.25W	57668	NTR25JE01K0
R606	315-0513-00			RES,FXD,FILM:51K OHM,5%,0.25W	57668	NTR25J-E51K0
R608	321-0356-00			RES,FXD,FILM:49.9K OHM,1%,0.125W,TC=T0	19701	5033ED49K90F
R610	321-0289-00			RES,FXD,FILM:10.0K OHM,1%,0.125W,TC=T0	19701	5033ED10K0F

Component No.	Tektronix Part No.	Serial/Assembly No. Effective	Dscont	Name & Description	Mfr. Code	Mfr. Part No.
R611	321-0289-00			RES,FXD,FILM:10.0K OHM,1%,0.125W,TC=T0	19701	5033ED10K0F
R612	315-0102-00	B040000	B159999	RES,FXD,FILM:1K OHM,5%,0.25W	57668	NTR25JE01K0
R613	301-0243-00	B010100	B159999	RES,FXD,FILM:24K OHM,5%,0.5W	19701	5053CX24K00J
R614	315-0104-00			RES,FXD,FILM:100K OHM,5%,0.25W	57668	NTR25J-E100K
R615	321-0306-00			RES,FXD,FILM:15.0K OHM,1%,0.125W,TC=T0	19701	5033ED15J00F
R617	315-0475-00			RES,FXD,FILM:4.7M OHM,5%,0.25W	01121	CB4755
R618	311-1285-00			RES,VAR,NONWW:TRMR,25K OHM,0.5W	32997	3329S-L58-253
R619	315-0433-00			RES,FXD,FILM:43K OHM,5%,0.25W	19701	5043CX43K00J
R620	315-0564-00			RES,FXD,FILM:560K OHM,5%,0.25W	19701	5043CX560K0J
R621	315-0221-00			RES,FXD,FILM:220 OHM,5%,0.25W	57668	NTR25J-E220E
R623	321-0318-00			RES,FXD,FILM:20.0K OHM,1%,0.125W,TC=T0	19701	5033ED20K00F
R625	321-0262-00			RES,FXD,FILM:5.23K OHM,1,0.125W,TC=T0	19701	5033ED5K230F
R626	321-0306-00			RES,FXD,FILM:15.0K OHM,1%,0.125W,TC=T0	19701	5033ED15J00F
R628	315-0101-00	B140000		RES,FXD,FILM:100 OHM,5%,0.25W	57668	NTR25J-E 100E
R629	315-0333-00			RES,FXD,FILM:33K OHM,5%,0.25W	57668	NTR25J-E33K0
R630	321-0289-00			RES,FXD,FILM:10.0K OHM,1%,0.125W,TC=T0	19701	5033ED10K0F
R631	315-0752-00			RES,FXD,FILM:7.5K OHM,5%,0.25W	57668	NTR25J-E07K5
R632	315-0752-00			RES,FXD,FILM:7.5K OHM,5%,0.25W	57668	NTR25J-E07K5
R633	315-0512-00	B010100	B153519	RES,FXD,FILM:5.1K OHM,5%,0.25W	57668	NTR25J-E05K1
R633	321-0261-00	B153520		RES,FXD,FILM:5.11K OHM,1%,0.125W,TC=T0	19701	5033ED5K110F
R634	315-0103-00	B010100	B153519	RES,FXD,FILM:10K OHM,5%,0.25W	19701	5043CX10K00J
R634	321-0288-00	B153520		RES,FXD,FILM:9.76K OHM,1%,0.125W,TC=T0	19701	5033ED9K760F
R635	315-0433-00			RES,FXD,FILM:43K OHM,5%,0.25W	19701	5043CX43K00J
R636	315-0752-00			RES,FXD,FILM:7.5K OHM,5%,0.25W	57668	NTR25J-E07K5
R637	315-0433-00			RES,FXD,FILM:43K OHM,5%,0.25W	19701	5043CX43K00J
R638	315-0753-00			RES,FXD,FILM:75K OHM,5%,0.25W	57668	NTR25J-E75K0
R639	315-0303-00			RES,FXD,FILM:30K OHM,5%,0.25W	19701	5043CX30K00J
R640	315-0564-00			RES,FXD,FILM:560K OHM,5%,0.25W	19701	5043CX560K0J
R641	321-0289-00			RES,FXD,FILM:10.0K OHM,1%,0.125W,TC=T0	19701	5033ED10K0F
R642	315-0303-00			RES,FXD,FILM:30K OHM,5%,0.25W	19701	5043CX30K00J
R643	321-0288-00			RES,FXD,FILM:9.76K OHM,1%,0.125W,TC=T0	19701	5033ED9K760F
R644	321-0384-00			RES,FXD,FILM:97.6K OHM,1%,0.125W,TC=T0	07716	CEAD97601F
R645	315-0203-00			RES,FXD,FILM:20K OHM,5%,0.25W	57668	NTR25J-E 20K
R646	321-0289-00			RES,FXD,FILM:10.0K OHM,1%,0.125W,TC=T0	19701	5033ED10K0F
R647	315-0102-00	B020000	B079999	RES,FXD,FILM:1K OHM,5%,0.25W	57668	NTR25JE01K0
R648	321-0288-00			RES,FXD,FILM:9.76K OHM,1%,0.125W,TC=T0	19701	5033ED9K760F
R649	315-0202-00	B080000		RES,FXD,FILM:2K OHM,5%,0.25W	57668	NTR25J-E 2K
R650	301-0123-00	B010100	B159999	RES,FXD,FILM:12K OHM,5%,0.5W	19701	5053CX12K00J
R651	321-0231-00	B080000		RES,FXD,FILM:2.49K OHM,1%,0.125W,TC=T0	19701	5033ED2K49F
R652	315-0101-00	B010100	B159999	RES,FXD,FILM:100 OHM,5%,0.25W	57668	NTR25J-E 100E
R653	321-0213-00			RES,FXD,FILM:1.62K OHM,1%,0.125W,TC=T0	07716	CEAD16200F
R654	321-0261-00	B010100	B159999	RES,FXD,FILM:5.11K OHM,1%,0.125W,TC=T0	19701	5033ED5K110F
R654	321-0289-00	B160000		RES,FXD,FILM:10.0K OHM,1%,0.125W,TC=T0	19701	5033ED10K0F
R655	321-0289-00			RES,FXD,FILM:10.0K OHM,1%,0.125W,TC=T0	19701	5033ED10K0F
R656	315-0102-00	B040000	B159999	RES,FXD,FILM:1K OHM,5%,0.25W	57668	NTR25JE01K0
R657	315-0101-00	B010100	B159999	RES,FXD,FILM:100 OHM,5%,0.25W	57668	NTR25J-E 100E
R658	301-0113-00	B010100	B159999	RES,FXD,FILM:11K OHM,5%,0.5W	19701	5053CX11K00J
R659	321-0213-00			RES,FXD,FILM:1.62K OHM,1%,0.125W,TC=T0	07716	CEAD16200F
R660	311-0387-00			RES,VAR,NONWW:PNL,5K OHM,0.5W	01121	W7565A
R661	321-0231-00	B080000		RES,FXD,FILM:2.49K OHM,1%,0.125W,TC=T0	19701	5033ED2K49F
R662	315-0511-00			RES,FXD,FILM:510 OHM,5%,0.25W	19701	5043CX510R0J
R663	315-0102-00	B040000	B159999	RES,FXD,FILM:1K OHM,5%,0.25W	57668	NTR25JE01K0
R664	315-0223-00			RES,FXD,FILM:22K OHM,5%,0.25W	19701	5043CX22K00J92U
R665	311-0487-00			RES,VAR,NONWW:PNL,30K OHM,0.5W	01121	W-7706
R666	315-0102-00	B040000	B159999	RES,FXD,FILM:1K OHM,5%,0.25W	57668	NTR25JE01K0
R667	321-0261-00			RES,FXD,FILM:5.11K OHM,1%,0.125W,TC=T0	19701	5033ED5K110F
R668	311-1283-00			RES,VAR,NONWW:TRMR,10K OHM,0.5W	32997	3329S-L58-103
R669	321-0367-00			RES,FXD,FILM:64.9K OHM,1%,0.125W,TC=T0	07716	CEAD64901F

Component No.	Tektronix Part No.	Serial/Assembly No. Effective	Dscont	Name & Description	Mfr. Code	Mfr. Part No.
R670	311-0329-00			RES,VAR,NONWW:PNL,50K OHM,0.5W	01121	W-7356A
R671	321-0261-00			RES,FXD,FILM:5.11K OHM,1%,0.125W,TC=T0	19701	5033ED5K110F
R672	315-0512-00			RES,FXD,FILM:5.1K OHM,5%,0.25W	57668	NTR25J-E05K1
R673	315-0105-00			RES,FXD,FILM:1M OHM,5%,0.25W	19701	5043CX1M000J
R674	311-0342-00			RES,VAR,WW:PNL,50K OHM,2W	02111	534-541
R675	311-0838-00			RES,VAR,WW:PNL,10K OHM,1W	02111	162-179
R676	321-0433-00	B020000	B099999	RES,FXD,FILM:316K OHM,1%,0.125W,TC=T0	07716	CEAD31602F
R676	321-0447-00	B100000		RES,FXD,FILM:442K OHM,1%,0.125W,TC=T0	24546	NA55D4423F
R677	311-1285-00	B020000	B099999	RES,VAR,NONWW:TRMR,25K OHM,0.5W	32997	3329S-L58-253
R677	311-1286-00	B100000	B129999	RES,VAR,NONWW:TRMR,50K OHM,0.5W	32997	3329S-L58-503
R677	311-1288-00	B130000		RES,VAR,NONWW:TRMR,200K OHM,0.5W	32997	3329S-L58-204
R678	315-0102-00			RES,FXD,FILM:1K OHM,5%,0.25W	57668	NTR25JE01K0
R679	321-0289-00			RES,FXD,FILM:10.0K OHM,1%,0.125W,TC=T0	19701	5033ED10K0F
R680	315-0243-00	B010100	B159999	RES,FXD,FILM:24K OHM,5%,0.25W	57668	NTR25J-E24K0
R681	315-0101-00	B010100	B159999	RES,FXD,FILM:100 OHM,5%,0.25W	57668	NTR25J-E 100E
R682	321-0435-00	B020000	B09999	RES,FXD,FILM:332K OHM,1%,0.125W,TC=T0	07716	CEAD33202F
R682	321-0452-00	B100000	B159999	RES,FXD,FILM:499K OHM,1%,0.125W,TC=T0	19701	5043ED499K0F
R682	321-0449-00	B160000		RES,FXD,FILM:464K OHM,1%,0.125W,TC=T0	19701	5043ED464K0F
R683	315-0102-00			RES,FXD,FILM:1K OHM,5%,0.25W	57668	NTR25JE01K0
R684	321-0312-00	B010100	B159999	RES,FXD,FILM:17.4K OHM,1%,0.125W,TC=T0	19701	5033ED17K40F
R684	321-0356-00	B160000		RES,FXD,FILM:49.9K OHM,1%,0.125W,TC=T0	19701	5033ED49K90F
R685	321-0289-00			RES,FXD,FILM:10.0K OHM,1%,0.125W,TC=T0	19701	5033ED10K0F
R686	315-0163-00	B010100	B159999	RES,FXD,FILM:16K OHM,5%,0.25W	57668	NTR25J-E 16K
R687	315-0183-00			RES,FXD,FILM:18K OHM,5%,0.25W	19701	5043CX18K00J
R688	315-0153-00	B020000	B099999	RES,FXD,FILM:15K OHM,5%,0.25W	19701	5043CX15K00J
R688	315-0752-00	B100000		RES,FXD,FILM:7.5K OHM,5%,0.25W	57668	NTR25J-E07K5
R689	316-0222-00	B020000	B089999	RES,FXD,CMPSN:2.2K OHM,10%,0.25W	01121	CB2221
R690	321-0351-00			RES,FXD,FILM:44.2K OHM,1%,0.125W,TC=T0	07716	CEAD44201F
R691	315-0512-00	B020000	B099999	RES,FXD,FILM:5.1K OHM,5%,0.25W	57668	NTR25J-E05K1
R691	315-0102-00	B100000	B119999	RES,FXD,FILM:1K OHM,5%,0.25W	57668	NTR25JE01K0
R691	315-0431-00	B120000		RES,FXD,FILM:430 OHM,5%,0.25W	19701	5043CX430R0J
R692	315-0513-00	B090000	B099999	RES,FXD,FILM:51K OHM,5%,0.25W	57668	NTR25J-E51K0
R692	315-0203-00	B100000		RES,FXD,FILM:20K OHM,5%,0.25W	57668	NTR25J-E 20K
R693	315-0153-00	B100000		RES,FXD,FILM:15K OHM,5%,0.25W	19701	5043CX15K00J
R694	315-0303-00			RES,FXD,FILM:30K OHM,5%,0.25W	19701	5043CX30K00J
R695	315-0104-00	B010100	B159999	RES,FXD,FILM:100K OHM,5%,0.25W	57668	NTR25J-E100K
R696	315-0104-00	B010100	B159999	RES,FXD,FILM:100K OHM,5%,0.25W	57668	NTR25J-E100K
R697	315-0202-00	B020000	B099999	RES,FXD,FILM:2K OHM,5%,0.25W	57668	NTR25J-E 2K
R697	315-0432-00	B100000		RES,FXD,FILM:4.3K OHM,5%,0.25W	57668	NTR25J-E04K3
R698	315-0104-00	B010100	B159999	RES,FXD,FILM:100K OHM,5%,0.25W	57668	NTR25J-E100K
R699	315-0104-00	B010100	B159999	RES,FXD,FILM:100K OHM,5%,0.25W	57668	NTR25J-E100K
R702	315-0102-00	B100000		RES,FXD,FILM:1K OHM,5%,0.25W	57668	NTR25JE01K0
R710	311-1122-01			RES,VAR,NONWW:PNL,5K OHM,10%,0.5W,SWITCH (FURNISHED AS A SET W/S531)	80009	311-1122-01
R712	315-0242-00			RES,FXD,FILM:2.4K OHM,5%,0.25W	57668	NTR25J-E02K4
R716	321-0313-00			RES,FXD,FILM:17.8K OHM,1%,0.125W,TC=T0	07716	CEAD17801F
R717	321-0226-00			RES,FXD,FILM:2.21K OHM,1%,0.125W,TC=T0	01121	RNK2211F
R720	321-0317-00			RES,FXD,FILM:19.6K OHM,1%,0.125W,TC=T0	07716	CEAD19601F
R721	321-0829-02			RES,FXD,FILM:202 OHM,0.5%,0.125W,TC=T2	19701	5033RC202R0D
R723	321-0318-00			RES,FXD,FILM:20.0K OHM,1%,0.125W,TC=T0	19701	5033ED20K00F
R725	321-0347-00			RES,FXD,FILM:40.2K OHM,1%,0.125W,TC=T0	91637	CMF55116G40201F
R726	321-0347-00			RES,FXD,FILM:40.2K OHM,1%,0.125W,TC=T0	91637	CMF55116G40201F
R727	321-0385-00			RES,FXD,FILM:100K OHM,1%,0.125W,TC=T0	19701	5033ED100K0F
R729	321-0327-00			RES,FXD,FILM:24.9K OHM,1%,0.125W,TC=T0	07716	CEAD24901F
R740	315-0101-00	B020000	B099999	RES,FXD,FILM:100 OHM,5%,0.25W	57668	NTR25J-E 100E
R740	315-0241-00	B100000		RES,FXD,FILM:240 OHM,5%,0.25W	19701	5043CX240R0J
R741	315-0151-00	B020000	B099999	RES,FXD,FILM:150 OHM,5%,0.25W	57668	NTR25J-E150E
R741	315-0241-00	B010000		RES,FXD,FILM:240 OHM,5%,0.25W	19701	5043CX240R0J

Component No.	Tektronix Part No.	Serial/Assembly No. Effective	Dscont	Name & Description	Mfr. Code	Mfr. Part No.
R743	315-0241-00			RES,FXD,FILM:240 OHM,5%,0.25W	19701	5043CX240R0J
R744	315-0511-00			RES,FXD,FILM:510 OHM,5%,0.25W	19701	5043CX510R0J
R746	315-0152-00			RES,FXD,FILM:1.5K OHM,5%,0.25W	57668	NTR25J-E01K5
R747	315-0242-00			RES,FXD,FILM:2.4K OHM,5%,0.25W	57668	NTR25J-E02K4
R761	321-0335-00			RES,FXD,FILM:30.1K OHM,1%,0.125W,TC=T0	57668	RB14FXE30K1
R765	321-0356-00			RES,FXD,FILM:49.9K OHM,1%,0.125W,TC=T0	19701	5033ED49K90F
R767	315-0753-00			RES,FXD,FILM:75K OHM,5%,0.25W	57668	NTR25J-E75K0
R768	315-0154-00			RES,FXD,FILM:150K OHM,5%,0.25W	57668	NTR25J-E150K
R769	315-0154-00			RES,FXD,FILM:150K OHM,5%,0.25W	57668	NTR25J-E150K
R770	315-0154-00			RES,FXD,FILM:150K OHM,5%,0.25W	57668	NTR25J-E150K
R771	315-0753-00			RES,FXD,FILM:75K OHM,5%,0.25W	57668	NTR25J-E75K0
R772	321-0344-00			RES,FXD,FILM:37.4K OHM,1%,0.125W,TC=T0	19701	5033ED 37K40F
R773	315-0154-00			RES,FXD,FILM:150K OHM,5%,0.25W	57668	NTR25J-E150K
R778	321-0344-00			RES,FXD,FILM:37.4K OHM,1%,0.125W,TC=T0	19701	5033ED 37K40F
R781	315-0154-00			RES,FXD,FILM:150K OHM,5%,0.25W	57668	NTR25J-E150K
R783	315-0753-00			RES,FXD,FILM:75K OHM,5%,0.25W	57668	NTR25J-E75K0
R785	315-0753-00			RES,FXD,FILM:75K OHM,5%,0.25W	57668	NTR25J-E75K0
R786	315-0154-00			RES,FXD,FILM:150K OHM,5%,0.25W	57668	NTR25J-E150K
R787	315-0753-00			RES,FXD,FILM:75K OHM,5%,0.25W	57668	NTR25J-E75K0
R801	315-0101-00			RES,FXD,FILM:100 OHM,5%,0.25W	57668	NTR25J-E 100E
R802	315-0101-00			RES,FXD,FILM:100 OHM,5%,0.25W	57668	NTR25J-E 100E
R805	315-0101-00			RES,FXD,FILM:100 OHM,5%,0.25W	57668	NTR25J-E 100E
R806	315-0101-00			RES,FXD,FILM:100 OHM,5%,0.25W	57668	NTR25J-E 100E
R809	315-0101-00			RES,FXD,FILM:100 OHM,5%,0.25W	57668	NTR25J-E 100E
R810	315-0101-00			RES,FXD,FILM:100 OHM,5%,0.25W	57668	NTR25J-E 100E
R821	321-0632-00			RES,FXD,FILM:9.41K OHM,0.5%,0.125W,TC=T2	19701	5033RC9K410C
R822	321-0601-00			RES,FXD,FILM:2.141K OHM,0.25%,0.125W,TC=T2	19701	5033RC2K141C
R824	321-0236-00			RES,FXD,FILM:2.80K OHM,1%,0.125W,TC=T0	07716	CEAD28000F
R826	321-0315-00			RES,FXD,FILM:18.7K OHM,1%,0.125W,TC=T0	19701	5043ED18K70F
R827	315-0180-00			RES,FXD,FILM:18 OHM,5%,0.25W	19701	5043CX18R00J
R829	315-0512-00			RES,FXD,FILM:5.1K OHM,5%,0.25W	57668	NTR25J-E05K1
R834	315-0101-00	B020000	B139999	RES,FXD,FILM:100 OHM,5%,0.25W	57668	NTR25J-E 100E
R839	315-0101-00	B020000	B139999	RES,FXD,FILM:100 OHM,5%,0.25W	57668	NTR25J-E 100E
R851	315-0472-00			RES,FXD,FILM:4.7K OHM,5%,0.25W	57668	NTR25J-E04K7
R853	316-0393-00	B060000		RES,FXD,CMPSN:39K OHM,10%,0.25W	01121	CB3931
R901	315-0103-00			RES,FXD,FILM:10K OHM,5%,0.25W	19701	5043CX10K00J
R903	315-0104-00			RES,FXD,FILM:100K OHM,5%,0.25W	57668	NTR25J-E100K
R906	315-0103-00			RES,FXD,FILM:10K OHM,5%,0.25W	19701	5043CX10K00J
R907	315-0303-00			RES,FXD,FILM:30K OHM,5%,0.25W	19701	5043CX30K00J
R910	315-0273-00			RES,FXD,FILM:27K OHM,5%,0.25W	57668	NTR25J-E27K0
R911	315-0303-00			RES,FXD,FILM:30K OHM,5%,0.25W	19701	5043CX30K00J
R913	315-0335-00			RES,FXD,FILM:3.3M OHM,5%,0.25W	01121	CB3355
R914	315-0304-00			RES,FXD,FILM:300K OHM,5%,0.25W	57668	NTR25J-E300K
R916	315-0104-00			RES,FXD,FILM:100K OHM,5%,0.25W	57668	NTR25J-E100K
R920	315-0510-00			RES,FXD,FILM:51 OHM,5%,0.25W	19701	5043CX51R00J
R921	315-0562-00			RES,FXD,FILM:5.6K OHM,5%,0.25W	57668	NTR25J-E05K6
R922	315-0511-00			RES,FXD,FILM:510 OHM,5%,0.25W	19701	5043CX510R0J
R923	315-0510-00			RES,FXD,FILM:51 OHM,5%,0.25W	19701	5043CX51R00J
R925	315-0105-00			RES,FXD,FILM:1M OHM,5%,0.25W	19701	5043CX1M000J
R926	315-0104-00			RES,FXD,FILM:100K OHM,5%,0.25W	57668	NTR25J-E100K
R929	315-0103-00			RES,FXD,FILM:10K OHM,5%,0.25W	19701	5043CX10K00J
R933	315-0103-00			RES,FXD,FILM:10K OHM,5%,0.25W	19701	5043CX10K00J
R934	315-0102-00			RES,FXD,FILM:1K OHM,5%,0.25W	57668	NTR25JE01K0
R935	315-0224-00			RES,FXD,FILM:220K OHM,5%,0.25W	57668	NTR25J-E220K
R937	315-0303-00			RES,FXD,FILM:30K OHM,5%,0.25W	19701	5043CX30K00J
R940	315-0513-00			RES,FXD,FILM:51K OHM,5%,0.25W	57668	NTR25J-E51K0
R941	315-0513-00			RES,FXD,FILM:51K OHM,5%,0.25W	57668	NTR25J-E51K0
R945	311-1280-00			RES,VAR,NONWW:TRMR,1K OHM,0.5W	32997	3329S-L58-102

Component No.	Tektronix Part No.	Serial/Assembly No. Effective	Dscont	Name & Description	Mfr. Code	Mfr. Part No.
R946	315-0153-00			RES,FXD,FILM:15K OHM,5%,0.25W	19701	5043CX15K00J
R947	315-0151-00			RES,FXD,FILM:150 OHM,5%,0.25W	57668	NTR25J-E150E
R950	315-0151-00			RES,FXD,FILM:150 OHM,5%,0.25W	57668	NTR25J-E150E
R951	315-0153-00			RES,FXD,FILM:15K OHM,5%,0.25W	19701	5043CX15K00J
R952	315-0183-00			RES,FXD,FILM:18K OHM,5%,0.25W	19701	5043CX18K00J
R954	315-0105-00			RES,FXD,FILM:1M OHM,5%,0.25W	19701	5043CX1M000J
R955	321-0289-00			RES,FXD,FILM:10.0K OHM,1%,0.125W,TC=T0	19701	5033ED10K0F
R956	321-0316-00			RES,FXD,FILM:19.1K OHM,1%,0.125W,TC=T0	07716	CEAD19101F
R957	321-0289-00			RES,FXD,FILM:10.0K OHM,1%,0.125W,TC=T0	19701	5033ED10K0F
R960	321-0385-00			RES,FXD,FILM:100K OHM,1%,0.125W,TC=T0	19701	5033ED100K0F
R962	321-0356-00			RES,FXD,FILM:49.9K OHM,1%,0.125W,TC=T0	19701	5033ED49K90F
R963	315-0105-00			RES,FXD,FILM:1M OHM,5%,0.25W	19701	5043CX1M000J
R965	321-0385-00			RES,FXD,FILM:100K OHM,1%,0.125W,TC=T0	19701	5033ED100K0F
S146	262-0927-00			SWITCH,WIRED:UNITS/DIV	80009	262-0927-00
S146	260-1218-00	B020000	B029999	SWITCH,ROTARY:UNITS/DIV	80009	260-1218-00
S146	260-1218-01	B030000		SWITCH,ROTARY:UNITS/DIV	76854	5-36221-411
S304	----- -----			(SEE FIG.1-69 RMPL)		
S320	----- -----			(FURNISHED AS A SET W/R30)		
S530	----- -----			(SEE FIG.1-143 RMPL)		
S531	----- -----			(FURNISHED AS A SET W/R710)		
S625	260-0735-00			SWITCH,PUSH:T,NO CONTACT,RED BUTTON	81073	39-1
S630	----- -----			(SEE FIG.1-71 RMPL)		
S640	----- -----			(SEE FIG.1-40 RMPL)		
S650	----- -----			(FURNISHED AS A SET W/R650)		
S670	----- -----			(SEE FIG.1-71 RMPL)		
S901	260-0984-00			SWITCH,SLIDE:DPTT,0.5A,125V	79727	G-128-S-0012
T230	120-0547-00			XFMR,TOROID:	TK1345	120-0547-00
T370	120-0546-00			XFMR,TOROID:	80009	120-0546-00
U620	155-0035-00	B010100	B159999	MICROCKT,LINEAR:QUAD OPNL AMPL	80009	155-0035-00
U620	156-1200-00	B160000		MICROCKT,LINEAR:OPERATIONAL AMP,QUAD BI-FET	01295	TL074CN
U650	155-0035-00	B010100	B159999	MICROCKT,LINEAR:QUAD OPNL AMPL	80009	155-0035-00
U650	156-1200-00	B160000		MICROCKT,LINEAR:OPERATIONAL AMP,QUAD BI-FET	01295	TL074CN
U680	156-0095-00			MICROCKT,LINEAR:DUAL DIFF AMPL	02735	CA3051-98
U910	156-0067-03	B010100	B154049	MICROCKT,LINEAR:OPNL AMPL	80009	156-0067-03
U910	156-0067-00	B154050		MICROCKT,LINEAR:OPNL AMPL,SEL	04713	MC1741CP1
U940	156-0067-03	B010100	B154049	MICROCKT,LINEAR:OPNL AMPL	80009	156-0067-03
U940	156-0067-00	B154050		MICROCKT,LINEAR:OPNL AMPL,SEL	04713	MC1741CP1
U955	156-0067-03	B010100	B154049	MICROCKT,LINEAR:OPNL AMPL	80009	156-0067-03
U955	156-0067-00	B154050		MICROCKT,LINEAR:OPNL AMPL,SEL	04713	MC1741CP1
VR221	152-0279-00			SEMICOND DVC,DI:ZEN,SI,5.1V,5%,0.4W,DO-7	14552	TD3810989
VR272	152-0168-00			SEMICOND DVC,DI:ZEN,SI,12V,5%,0.4W,DO-763B	14552	TD331689
VR274	152-0168-00			SEMICOND DVC,DI:ZEN,SI,12V,5%,0.4W,DO-763B	14552	TD331689
VR604	152-0055-00			SEMICOND DVC,DI:ZEN,SI,11V,5%,0.4W,DO-7	14433	Z5407
VR619	152-0055-00			SEMICOND DVC,DI:ZEN,SI,11V,5%,0.4W,DO-7	14433	Z5407
W612	131-0566-00	B160000		BUS,CONDUCTOR:DUMMY RES,0.094 OD X 0.225 L	24546	OMA 07
W656	131-0566-00	B160000		BUS,CONDUCTOR:DUMMY RES,0.094 OD X 0.225 L	24546	OMA 07
W663	131-0566-00	B160000		BUS,CONDUCTOR:DUMMY RES,0.094 OD X 0.225 L	24546	OMA 07
W666	131-0566-00	B160000		BUS,CONDUCTOR:DUMMY RES,0.094 OD X 0.225 L	24546	OMA 07

DIAGRAMS AND CIRCUIT BOARD ILLUSTRATIONS

Symbols and Reference Designators

Electrical components shown on the diagrams are in the following units unless noted otherwise:

Capacitors = Values one or greater are in picofarads (pF). Values less than one are in microfarads (μF).

Resistors = Ohms (Ω).

Graphic symbols and class designation letters are based on ANSI Standard Y32.2-1975.

Logic symbology is based on ANSI Y32.14-1973 in terms of positive logic. Logic symbols depict the logic function performed and may differ from the manufacturer's data.

The overline on a signal name indicates that the signal performs its intended function when it goes to the low state.

Abbreviations are based on ANSI Y1.1-1972.

Other ANSI standards that are used in the preparation of diagrams by Tektronix, Inc. are:

Y14.15, 1966	Drafting Practices.
Y14.2, 1973	Line Conventions and Lettering.
Y10.5, 1968	Letter Symbols for Quantities Used in Electrical Science and Electrical Engineering.

The following prefix letters are used as reference designators to identify components or assemblies on the diagrams.

A	Assembly, separable or repairable (circuit board, etc)
AT	Attenuator, fixed or variable
B	Motor
BT	Battery
C	Capacitor, fixed or variable
CB	Circuit breaker
CR	Diode, signal or rectifier
DL	Delay line
DS	Indicating device (lamp)
E	Spark Gap, Ferrite bead
F	Fuse
FL	Filter
H	Heat dissipating device (heat sink, heat radiator, etc)
HR	Heater
HY	Hybrid circuit
J	Connector, stationary portion
K	Relay
L	Inductor, fixed or variable
M	Meter
P	Connector, movable portion
Q	Transistor or silicon-controlled rectifier
R	Resistor, fixed or variable
RT	Thermistor
S	Switch or contactor
T	Transformer
TC	Thermocouple
TP	Test point
U	Assembly, inseparable or non-repairable (integrated circuit, etc.)
V	Electron tube
VR	Voltage regulator (zener diode, etc.)
W	Wirestrap or cable
Y	Crystal
Z	Phase shifter

The following special symbols may appear on the diagrams:

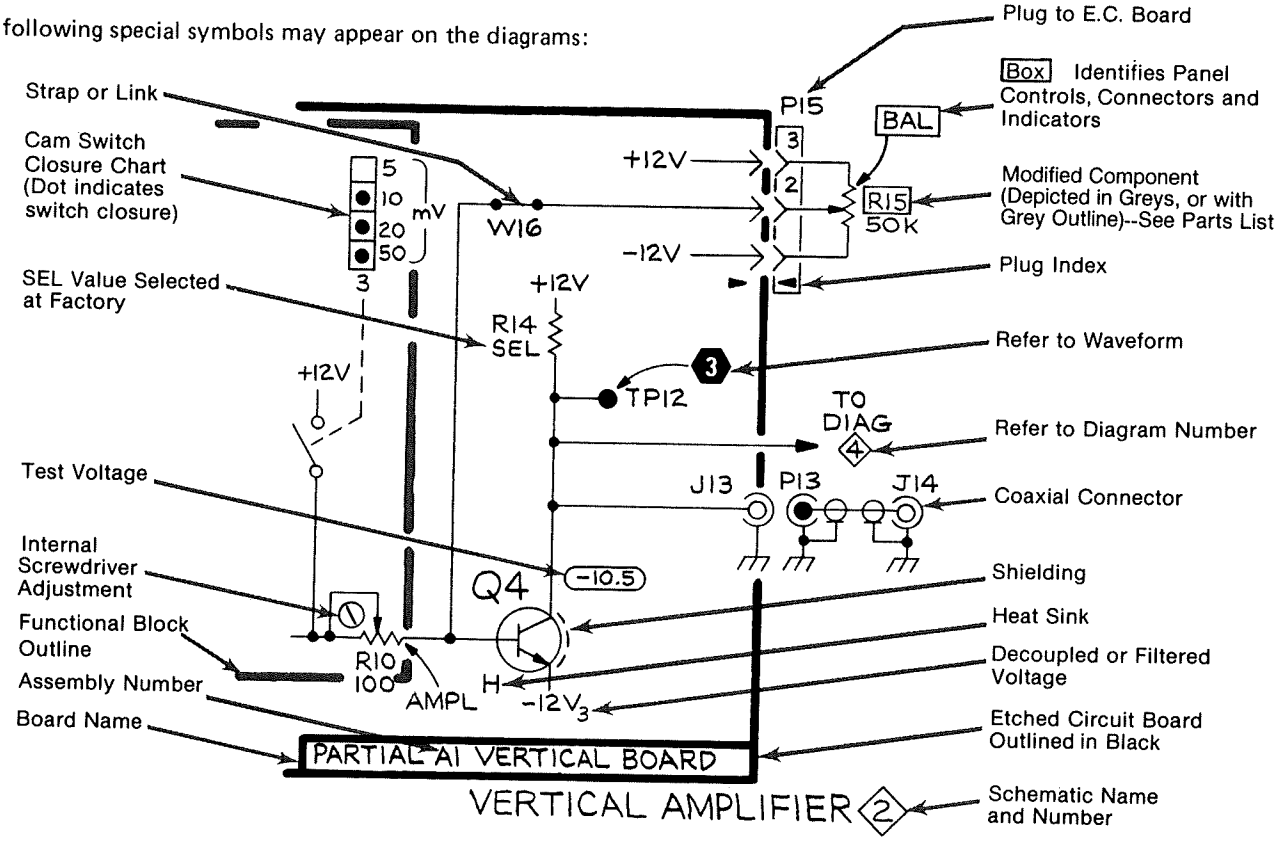

TROUBLESHOOTING CONDITIONS

Power the 7S12 (with S-52 and S-6 Heads installed) from a 7000-series Oscilloscope by two flexible extenders (Tektronix Part No. 067-0616-00 Calibration Fixture). Use a card extender (Tektronix Part No. 018-0064-00) when necessary for access to the Vertical or the Horizontal plug-in circuit cards.

Control settings for the 7S12:

Time Distance dial	0
Multiplier	X1
Time/Div	10 ns
Variable	Cal In
Fine (Zero Set)	Fully Clockwise
Rep	Pushed in
Scan	Midrange
Locate	Pushed in
mV	Pushed in
mV/Div	100
DC Offset (& Fine)	Midrange
S901	Normal (center)

The troubleshooting waveforms, shown with some schematic diagrams, were obtained with a 7504 Oscilloscope with 7B50 Time Base, 7S16 Amplifier (in 20 MHz Bandwidth Mode), and P6053, 10X probe (the CRT readout includes probe attenuation).

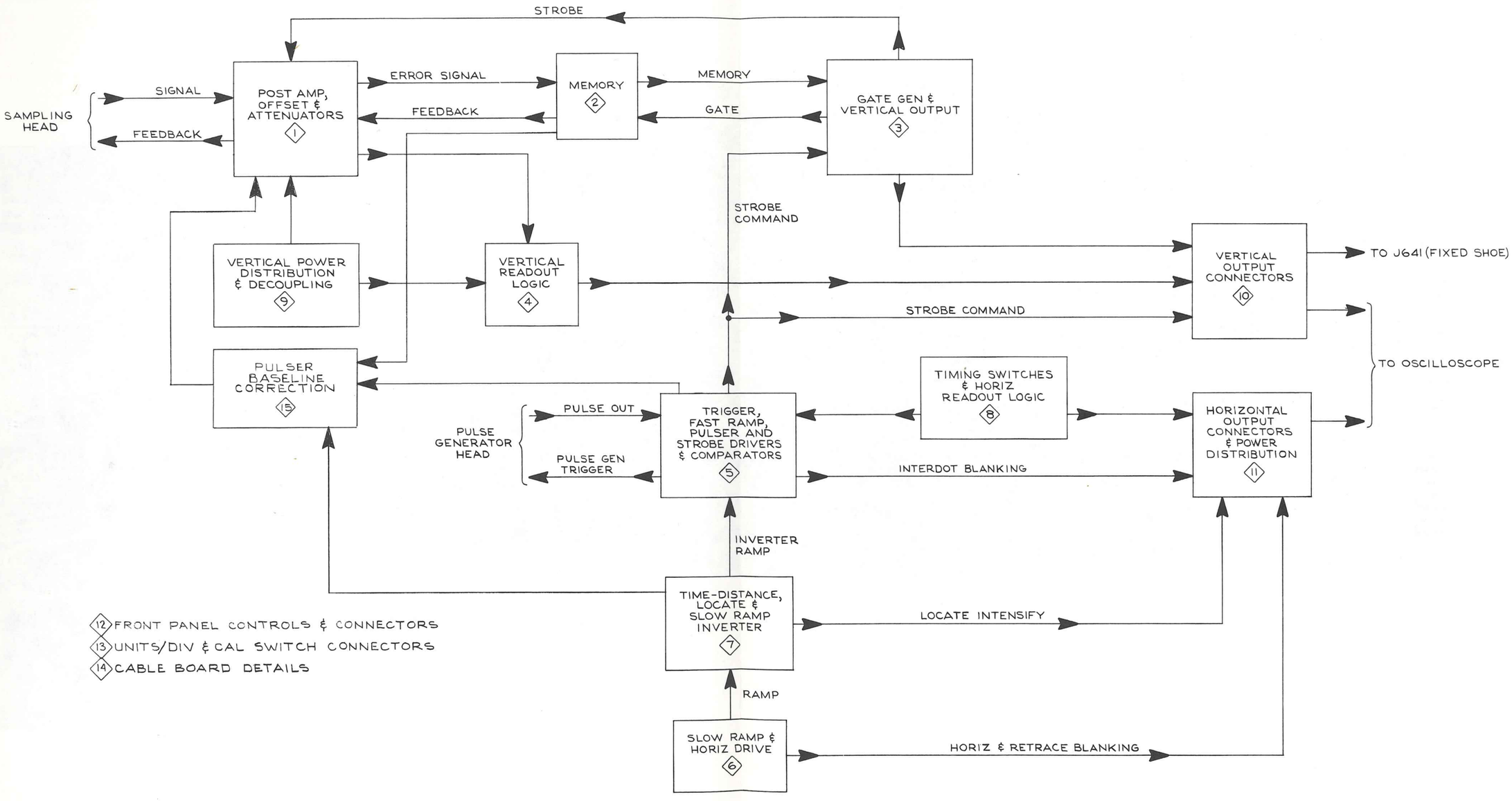

GRS
971

BLOCK DIAGRAM

SNB020000-UP

P31 Brn 7 pin conn
1 Brn on wht
2 Red on wht
3 Orn on wht
4 Yel on wht
5 Grn on wht
6 Blu on wht
7 Vio on wht

P32 Red 9 pin conn
1 Brn on wht
2 Red on wht
3 Orn on wht
4 Yel on wht
5 Grn on wht
6 Blu on wht
7 Vio on wht
8 Gry on wht
9 Blk on wht

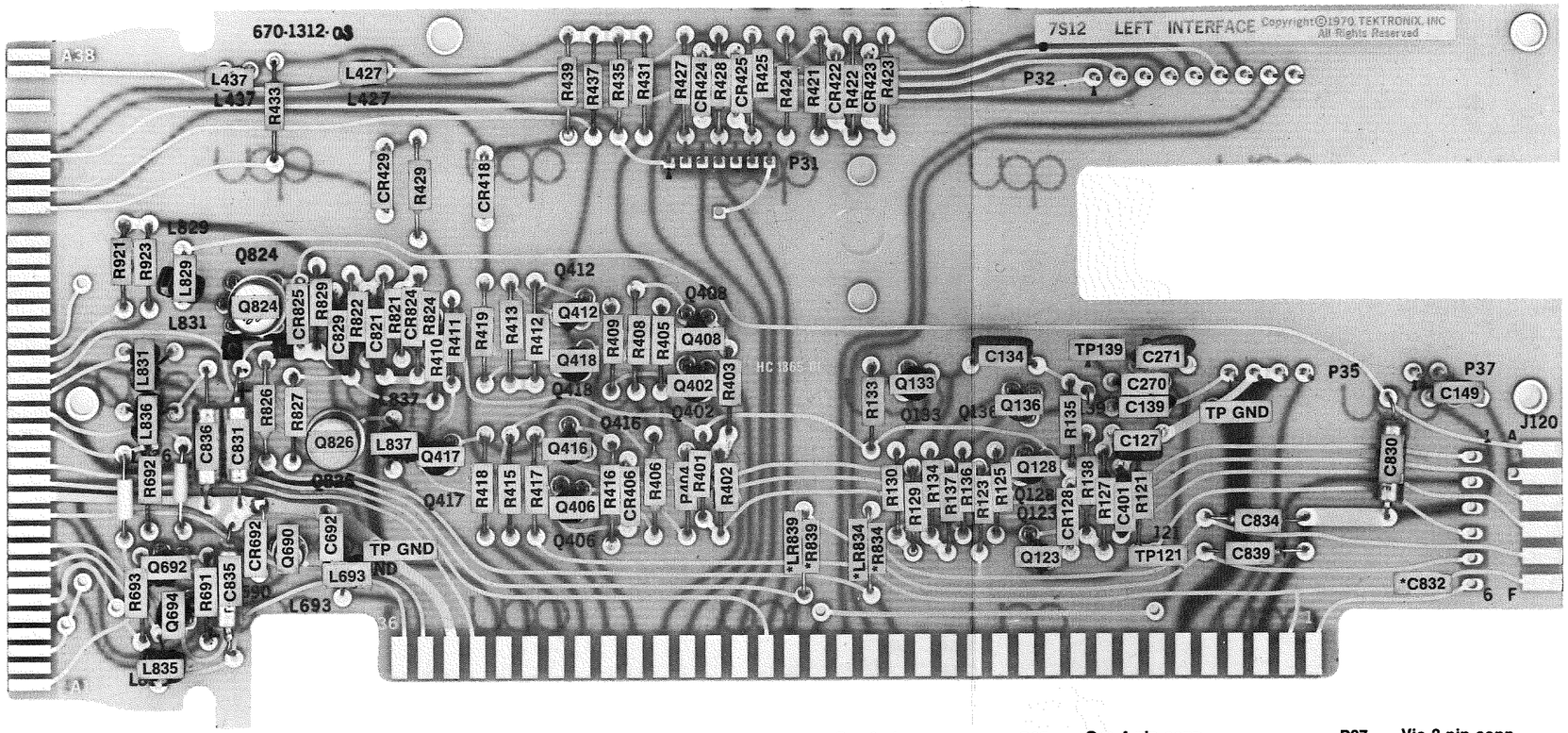

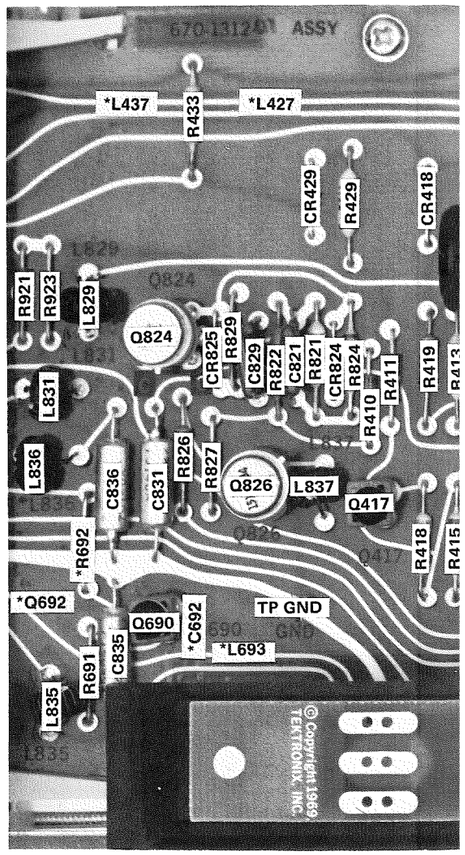

P33 Orn 2 pin conn
1 Brn on wht
2 Red on wht

P35 Grn 4 pin conn
1 Blk on wht (50 Ω Coax)
2 Shield of P1
3 Shield of P4
4 Brn on wht (50 Ω Coax)

P37 Vio 2 pin conn
1 Shield of P2
2 Red on wht (50 Ω Coax)

*See Parts List for serial number ranges.

Fig. 7-1a Assembly A-1, Left Interface board (SN B10000 & up).

P32 Red 9 pin conn
1 Brn on wht
2 Red on wht
3 Orn on wht
4 Yel on wht
5 Grn on wht
6 Blu on wht
7 Vio on wht
8 Gry on wht
9 Blk on wht

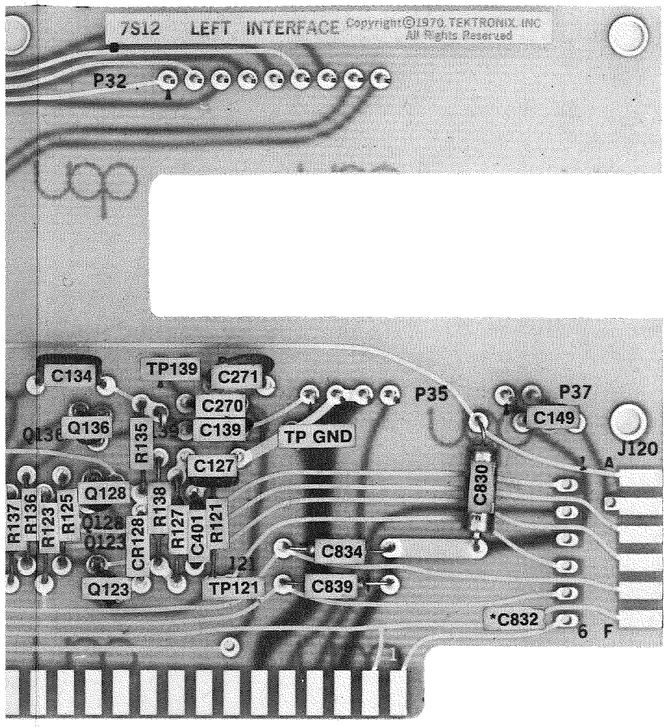

n **P35** Grn 4 pin conn
1 Blk on wht (50 Ω Coax)
2 Shield of P1
3 Shield of P4
4 Brn on wht (50 Ω Coax)

P37 Vio 2 pin conn
1 Shield of P2
2 Red on wht (50 Ω Coax)

*See Parts List for serial number ranges.

B10000 & up).

P31 Brn 7 pin conn
1 Brn on wht
2 Red on wht
3 Orn on wht
4 Yel on wht
5 Grn on wht
6 Blu on wht
7 Vio on wht

P32 Red 9 pin conn
1 Brn on wht
2 Red on wht
3 Orn on wht
4 Yel on wht
5 Grn on wht
6 Blu on wht
7 Vio on wht
8 Gry on wht
9 Blk on wht

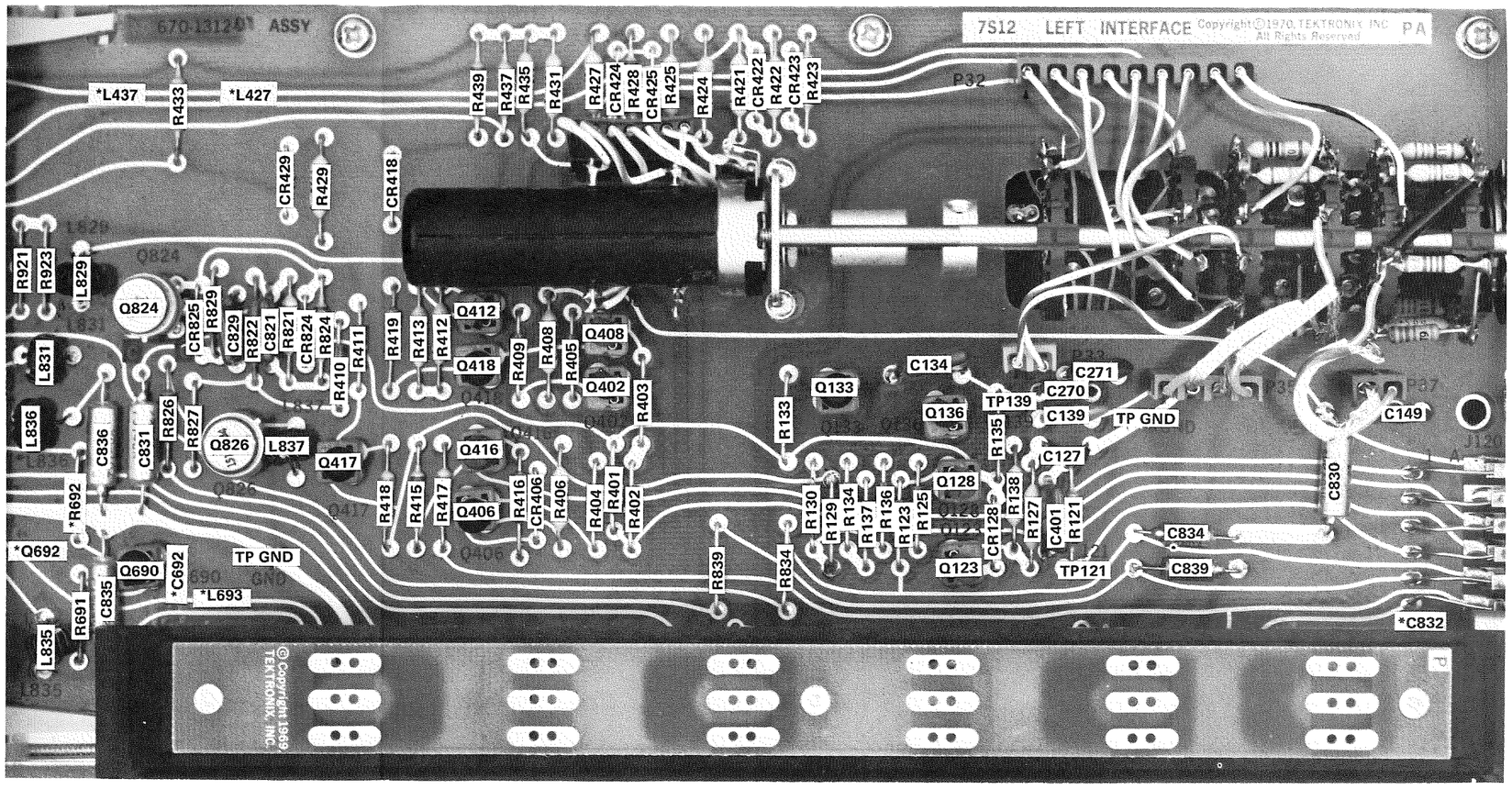

P33 Orn 2 pin conn
1 Brn on wht
2 Red on wht

P35 Grn 4 pin conn
1 Blk on wht (50 Ω Coax)
2 Shield of P1
3 Shield of P4
4 Brn on wht (50 Ω Coax)

P37 Vio 2 pin conn
1 Shield of P2
2 Red on wht (50 Ω Coax)

*See Parts List for serial number ranges.

Fig. 7-1b. Assembly A-1, Left Interface board (below SN B10000).

1

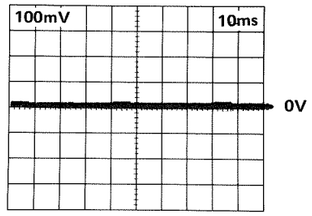

2

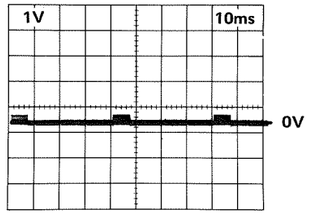

Test oscilloscope triggered internally. For other conditions see page 7-2.

WAVEFORMS

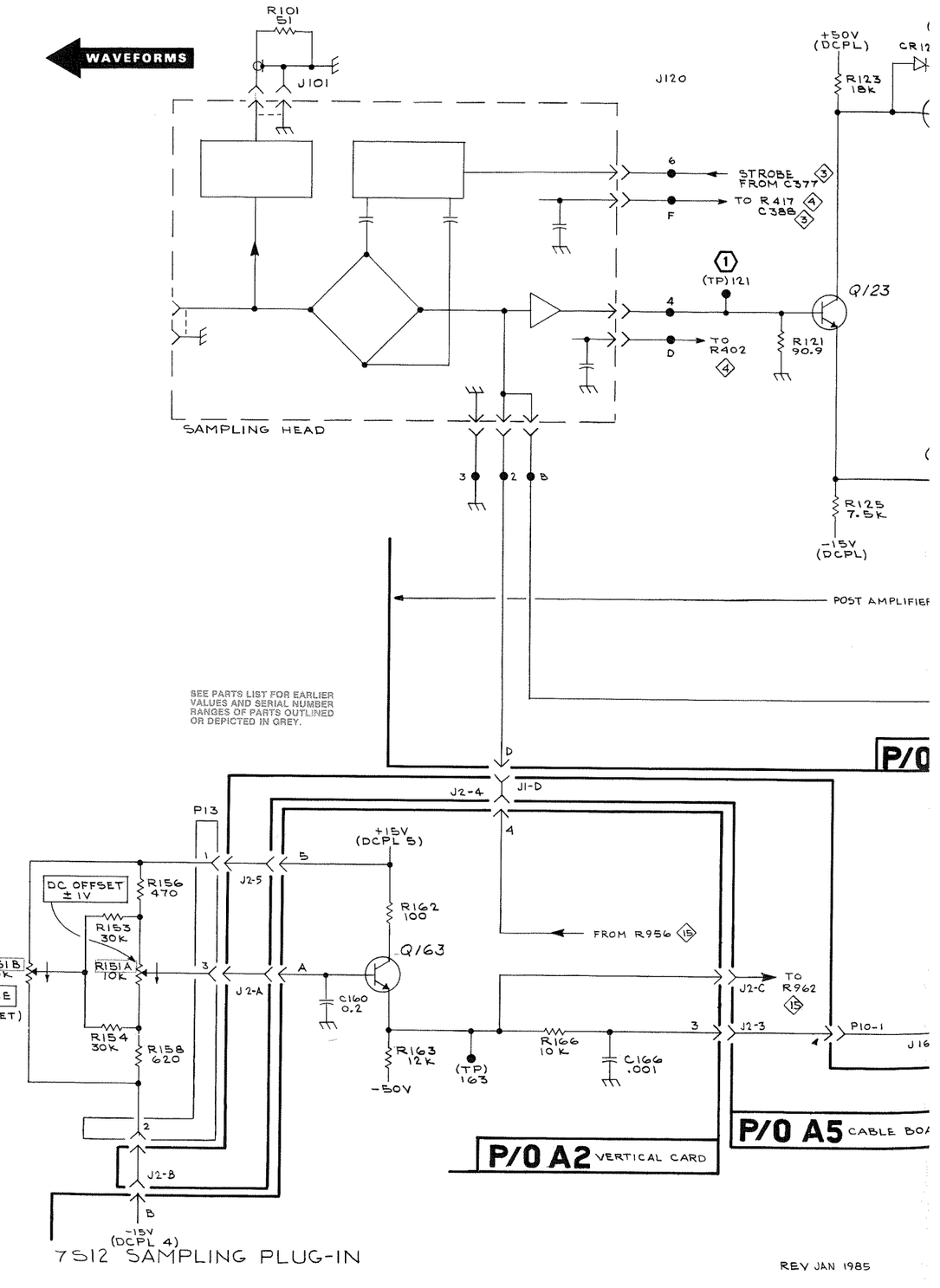

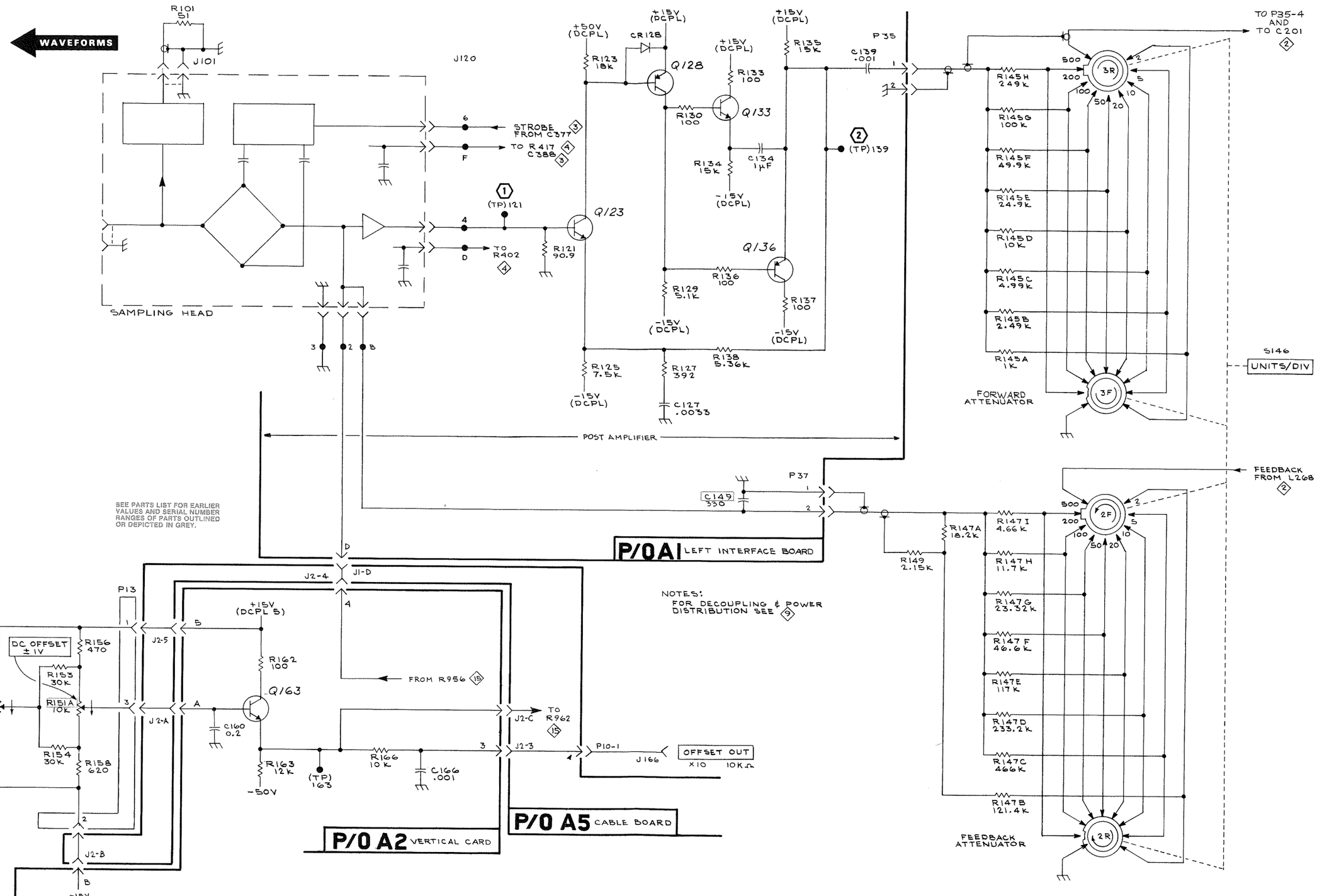

SEE PARTS LIST FOR EARLIER VALUES AND SERIAL NUMBER RANGES OF PARTS OUTLINED OR DEPICTED IN GREY.

NOTES:
FOR DECOUPLING & POWER DISTRIBUTION SEE 9

7S12 SAMPLING PLUG-IN

REV JAN 1985

POST AMP, OFFSET & ATTENUATORS 1

SN B020000-UP

hq 971

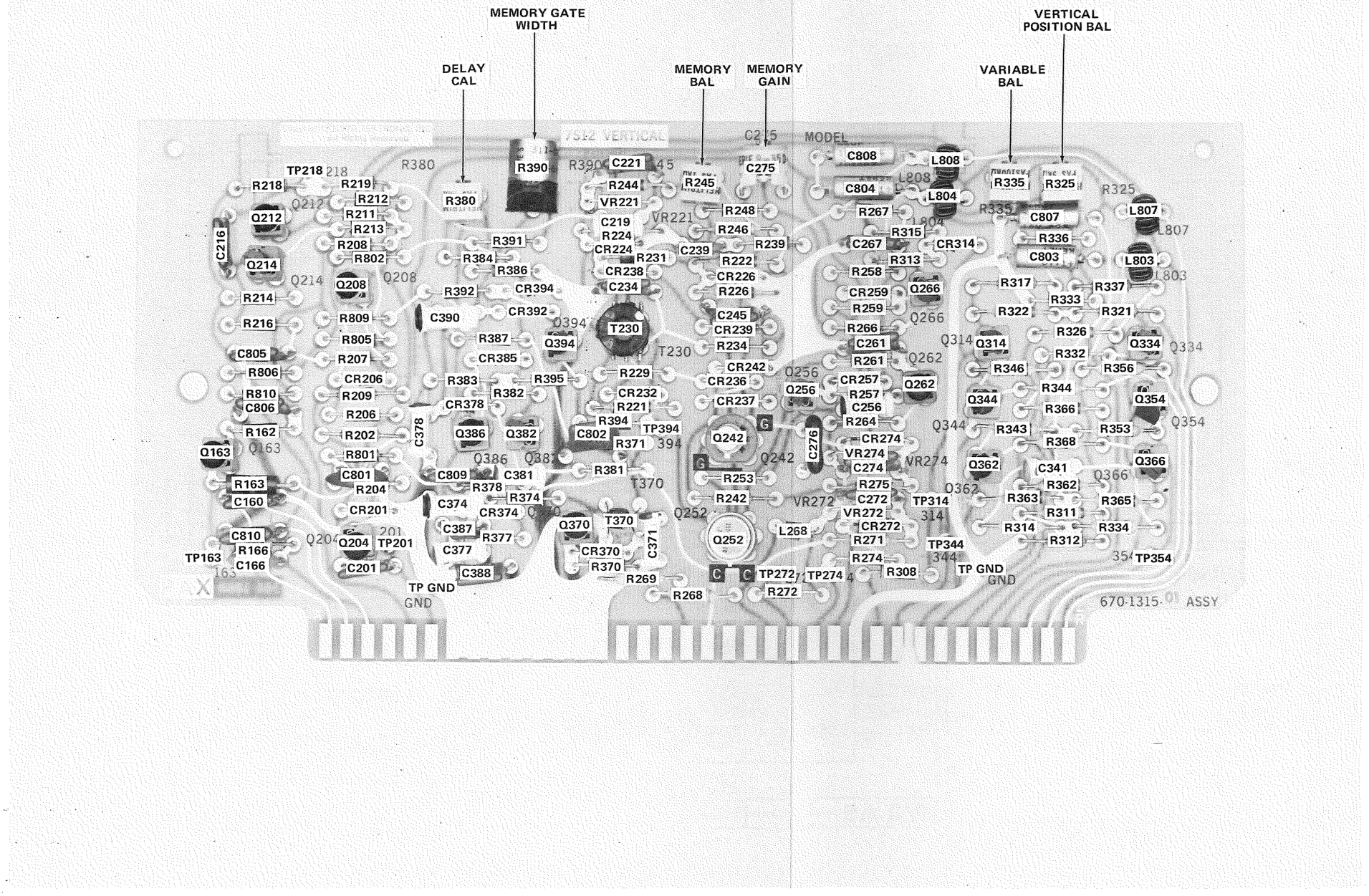

Fig. 7-2. Assembly A-2, Vertical Card.

ASSEMBLY A-2

A

(1)

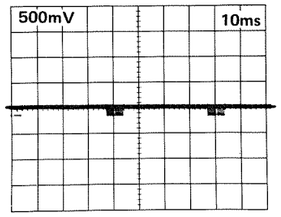

(2)

This waveform is affected by DC OFFSET control.

Test oscilloscope triggered internally. For other conditions see page 7-2.

WAVEFORMS

NOTE:
FOR DECOUPLING & POWER DISTRIBUTION SEE (3)

P/O A2 VERTICAL CARD

(TP)2

AC AMPLIFIER — MEMORY GATE

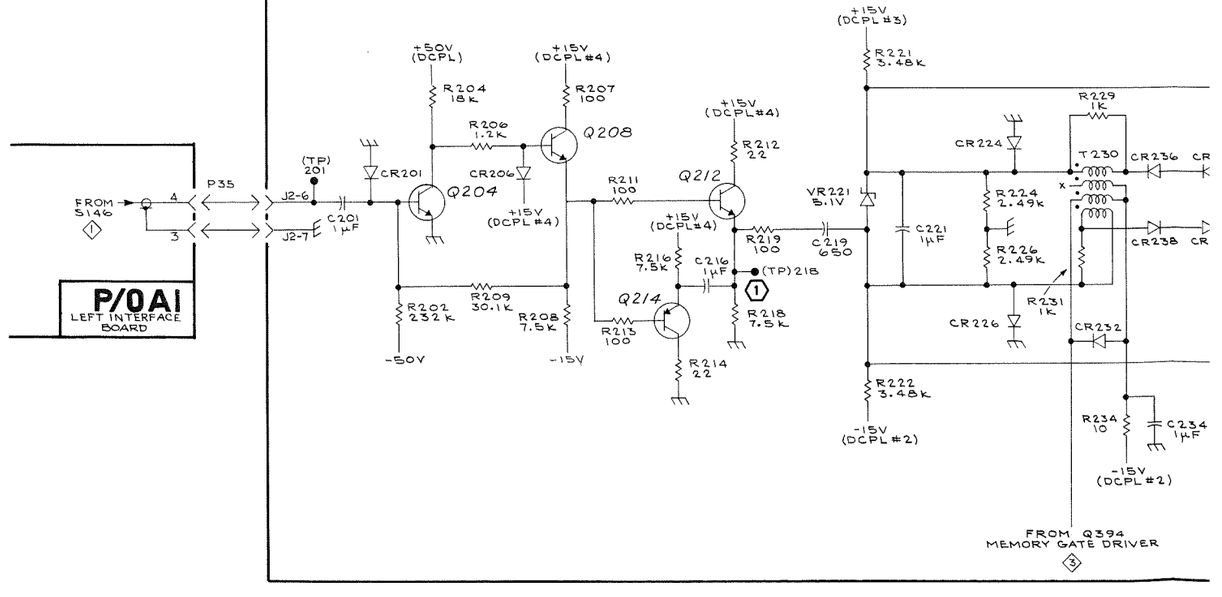

WAVEFORMS

NOTE:
FOR DECOUPLING & POWER DISTRIBUTION SEE ⑨

P/O A1 LEFT INTERFACE BOARD

C271 .0011
C270 180
P33
S146
P32
X
W
J1-X
J1-W

P/O A5 CABLE BOARD

⑫ S630
C273 .0033
J15
IN
OUT
HIGH RESOLUTION
P12-2
MEMORY TO R303 ③

J2-24
J2-23
J2-22

P/O A2 VERTICAL CARD

24
23
22
(TP) 274
(TP) 272 ②
+50V
R271 54.9K
CR272
R274 330
R272 330
C275 9-35
C272 0.2
VR272 12V
C276 35
C274 0.2
VR274 12V
CR274
R275 54.9K
-50V

AC AMPLIFIER
MEMORY GATE

+15V (DCPL #3)
Q252A
Q252B
R253 100
Q256
Q262
Q266
R261 100
R257 240
R258 240
R259 24K
R264 100
R266 100
R267 100
C256 21
C261 1μF
C267 1μF
CR257
CR259
L268 3T

FROM S146 ①
P35
J2-6
J2-7
(TP) 201
C201 1μF
P/O A1 LEFT INTERFACE BOARD

+50V (DCPL)
+15V (DCPL #4)
R204 18K
R207 100
Q208
R206 1.2K
CR201
CR206
Q204
R202 232K
R209 30.1K
R208 7.5K
-15V

R211 100
Q212
R212 22
R219 100
C219 650
VR221 5.1V
R221 3.48K
R222 3.48K
-15V (DCPL #2)

R216 7.5K
C216 1μF
(TP) 218 ①
Q214
R213 100
R214 22
R218 7.5K

CR224
R224 2.49K
R226 2.49K
CR226
R229 1K
T230
CR236
CR237
CR238
CR239
R231 1K
CR232
C221 1μF

Q242A
Q242B
R239 51
C239 .005
CR242
R242 25.5K
R244 4.32K
R245 1K
MEMORY BAL
R246 4.32K
C245 1μF
R248 4.7M

R234 10
C234 1μF
-15V (DCPL #2)

FROM Q394 MEMORY GATE DRIVER ③

MEMORY AMPLIFIER

R268 61.5K
R269 11.94K
J2 18
P10
J269
VERT SIG OUT

FEEDBACK TO S146 ①
P32
9
J1-V
J2-22
TO J3-28 ⑮
P/O A5 CABLE BOARD
J18 4
TO SHOE ⑩

MEMORY ②
SN B020000- UP
hq 971

1

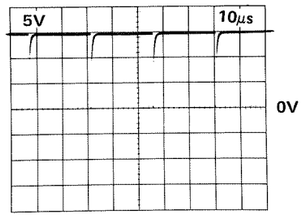

2

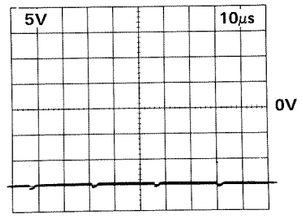

Test oscilloscope triggered from Right Interface board TP 504 signal. For other conditions see page 7-2.

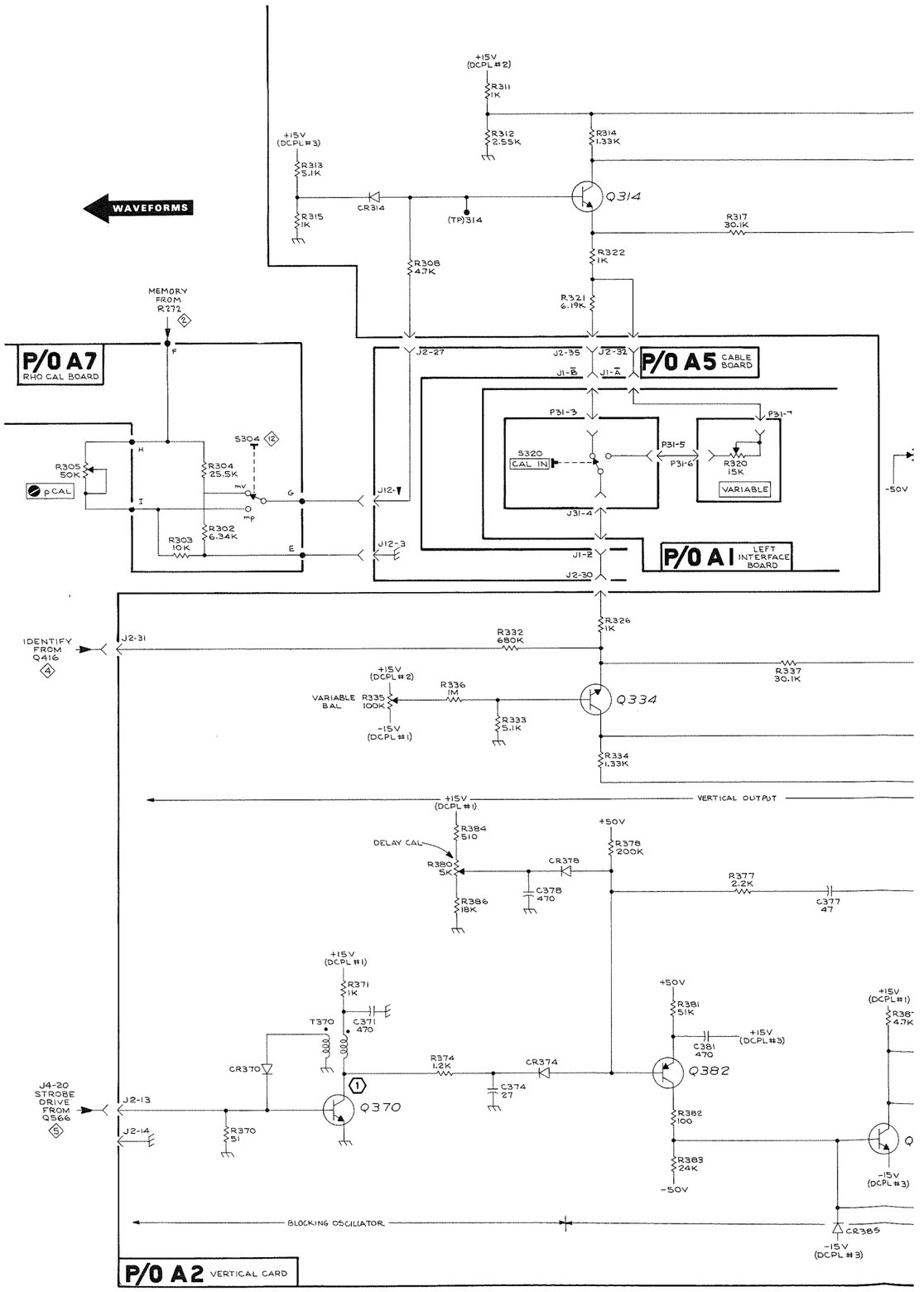

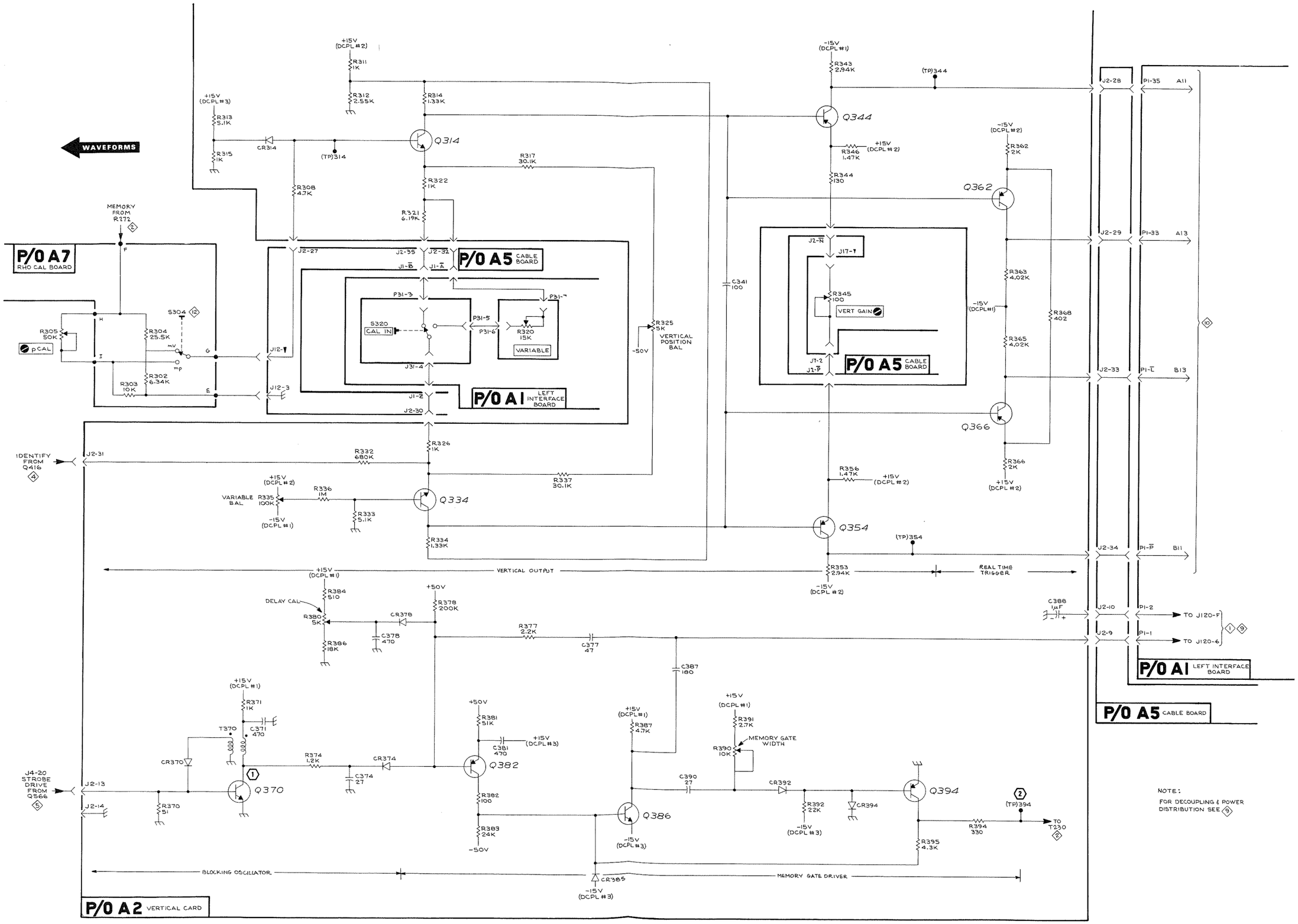
WAVEFORMS
P/O A7 RHO CAL BOARD
P/O A5 CABLE BOARD
P/O A1 LEFT INTERFACE BOARD
P/O A2 VERTICAL CARD
MEMORY FROM R272
IDENTIFY FROM Q416
J4-20 STROBE DRIVE FROM Q566
VERTICAL POSITION BAL
VERT GAIN
VARIABLE BAL
DELAY CAL
MEMORY GATE WIDTH
VERTICAL OUTPUT
REAL TIME TRIGGER
BLOCKING OSCILLATOR
MEMORY GATE DRIVER
TO J120-F
TO J120-6
TO T230
Q314
Q334
Q344
Q354
Q362
Q366
Q370
Q382
Q386
Q394
NOTE:
FOR DECOUPLING & POWER DISTRIBUTION SEE 9

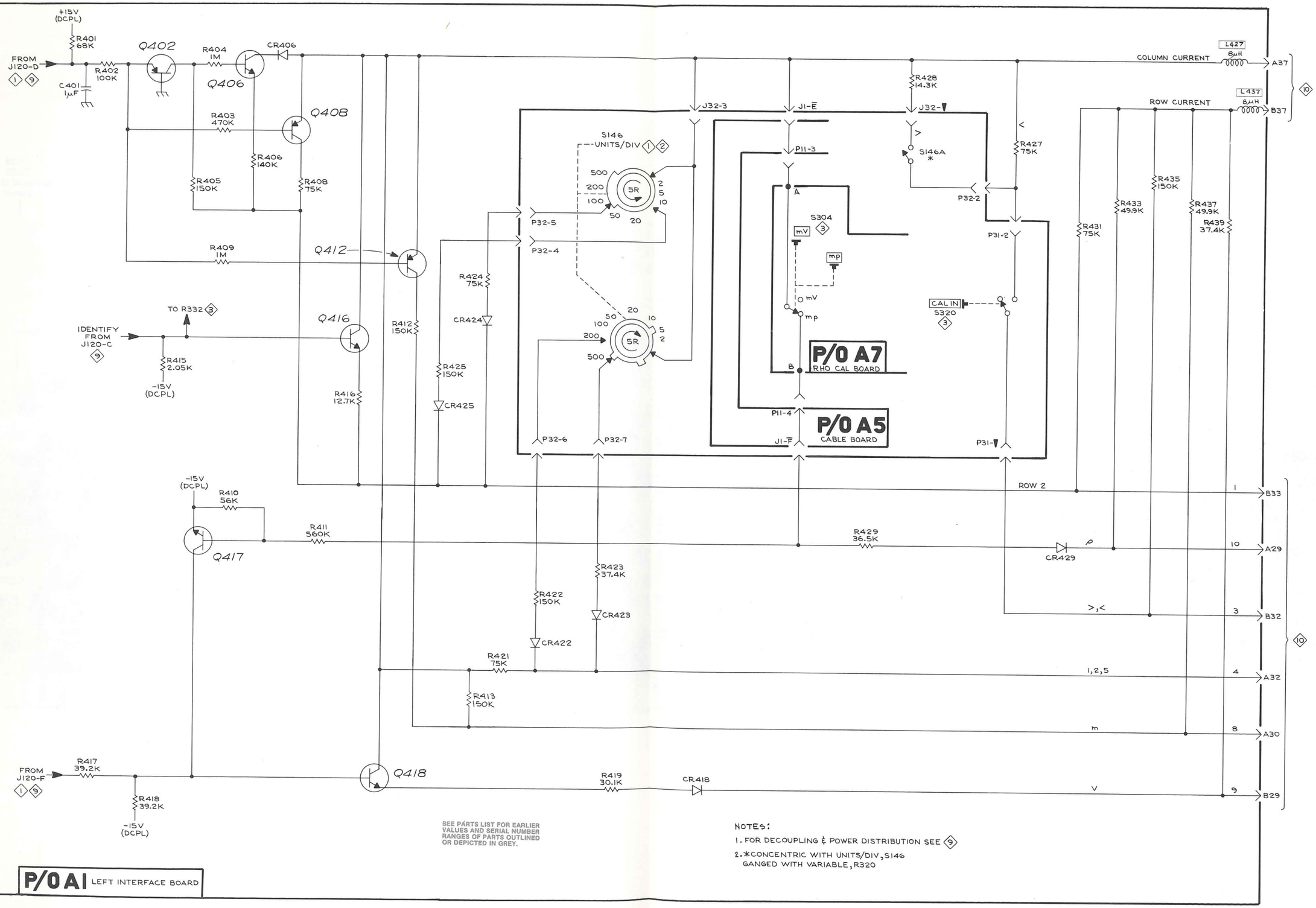

SEE PARTS LIST FOR EARLIER VALUES AND SERIAL NUMBER RANGES OF PARTS OUTLINED OR DEPICTED IN GREY.

NOTES:

1. FOR DECOUPLING & POWER DISTRIBUTION SEE 9
2. *CONCENTRIC WITH UNITS/DIV, S146 GANGED WITH VARIABLE, R320

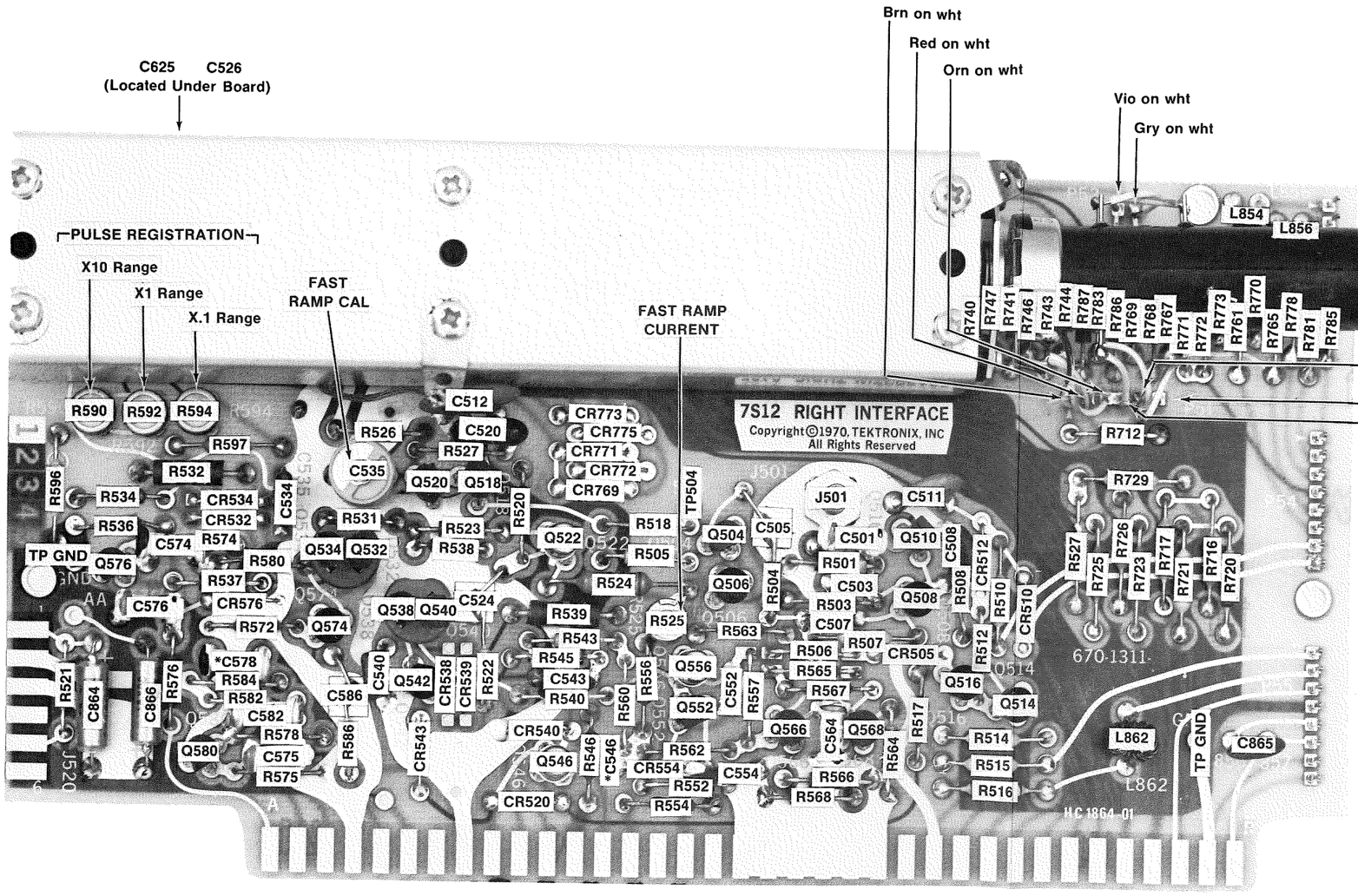

P53 Orn 2 pin conn
1 Brn on wht
2 Red on wht

P54 Yel 8 pin conn
1 Brn on wht
2 Red on wht
3 Orn on wht
4 Yel on wht
5 Grn on wht
6 Blu on wht
7 Vio on wht
8 Gry on wht

P55 Grn 8 pin conn
1 Brn on wht
2 Red on wht
3 Orn on wht
4 Yel on wht
5 Grn on wht
6 Blu on wht
7 Vio on wht
8 Gry on wht

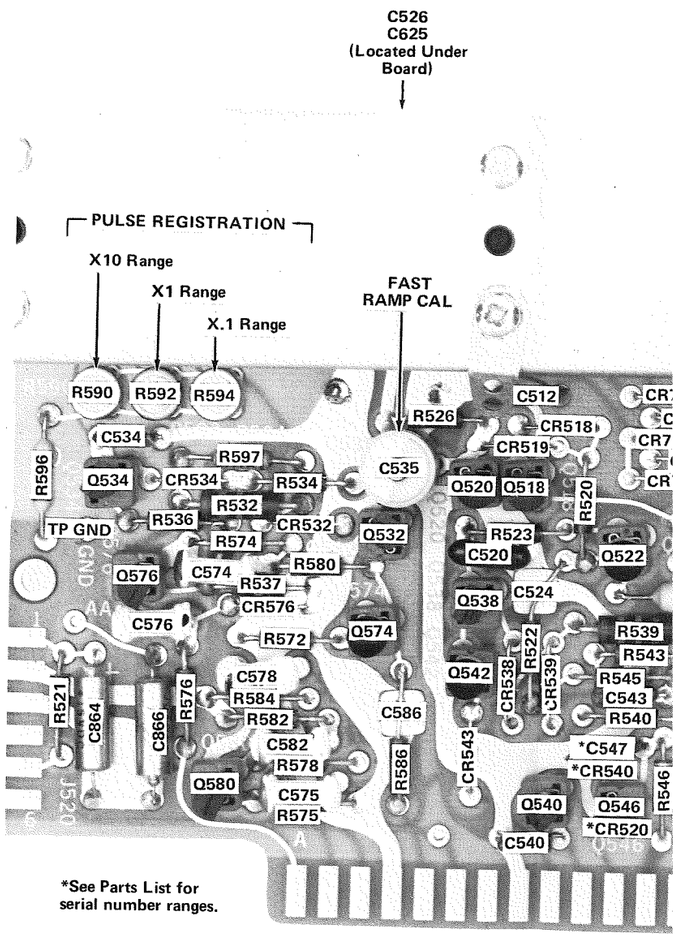

*See Parts List for serial number ranges.

Fig. 7-3a, Assembly A-3, Right Interface (SN B10000 & up).

Fig. 7-3b.

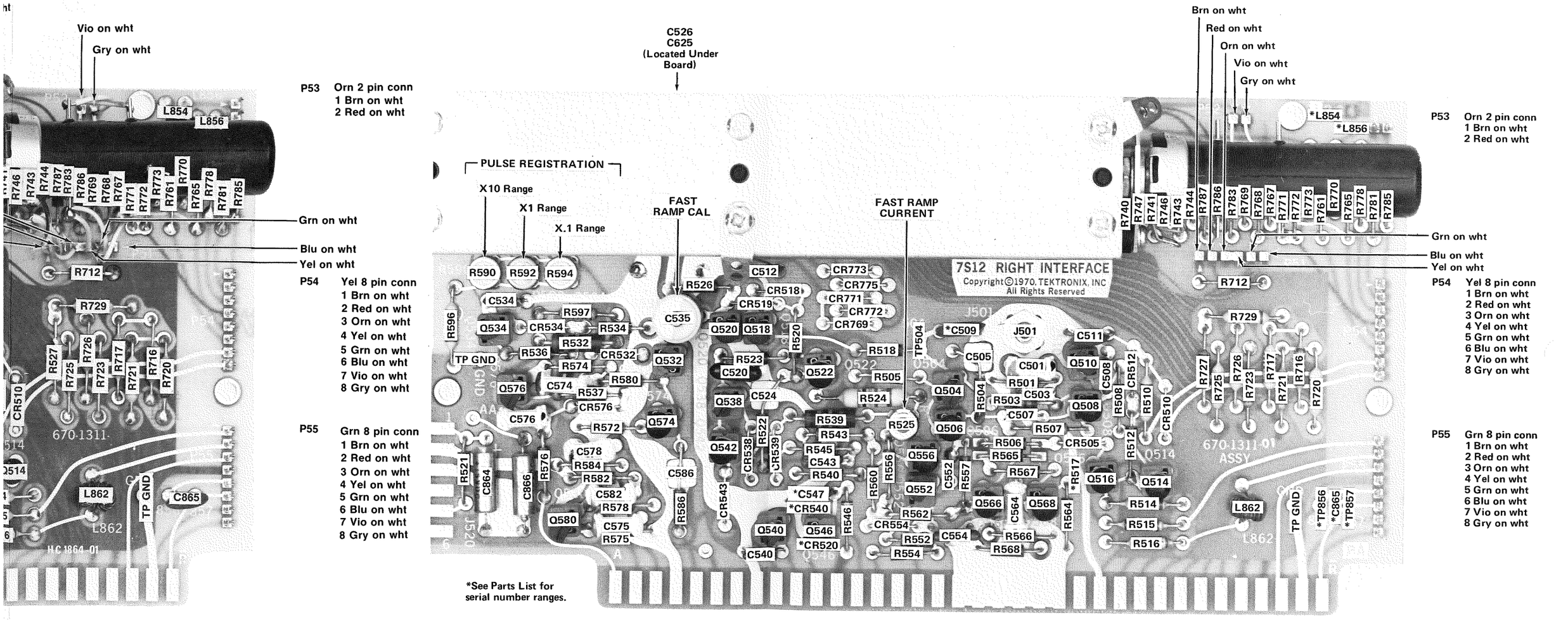

*See Parts List for serial number ranges.

e (SN B10000 & up).

Fig. 7-3b. Assembly A-3, Right Interface (below SN B10000).

1

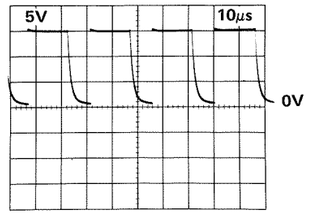

2

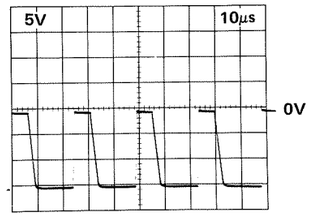

3

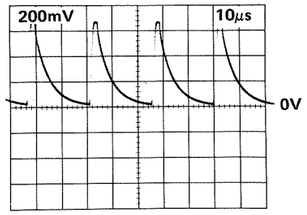

4

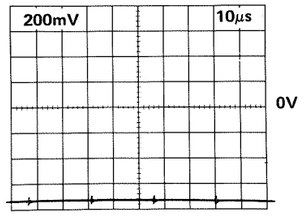

Test oscilloscope triggered from Right Interface board TP 504 signal. For other conditions see page 7-2.

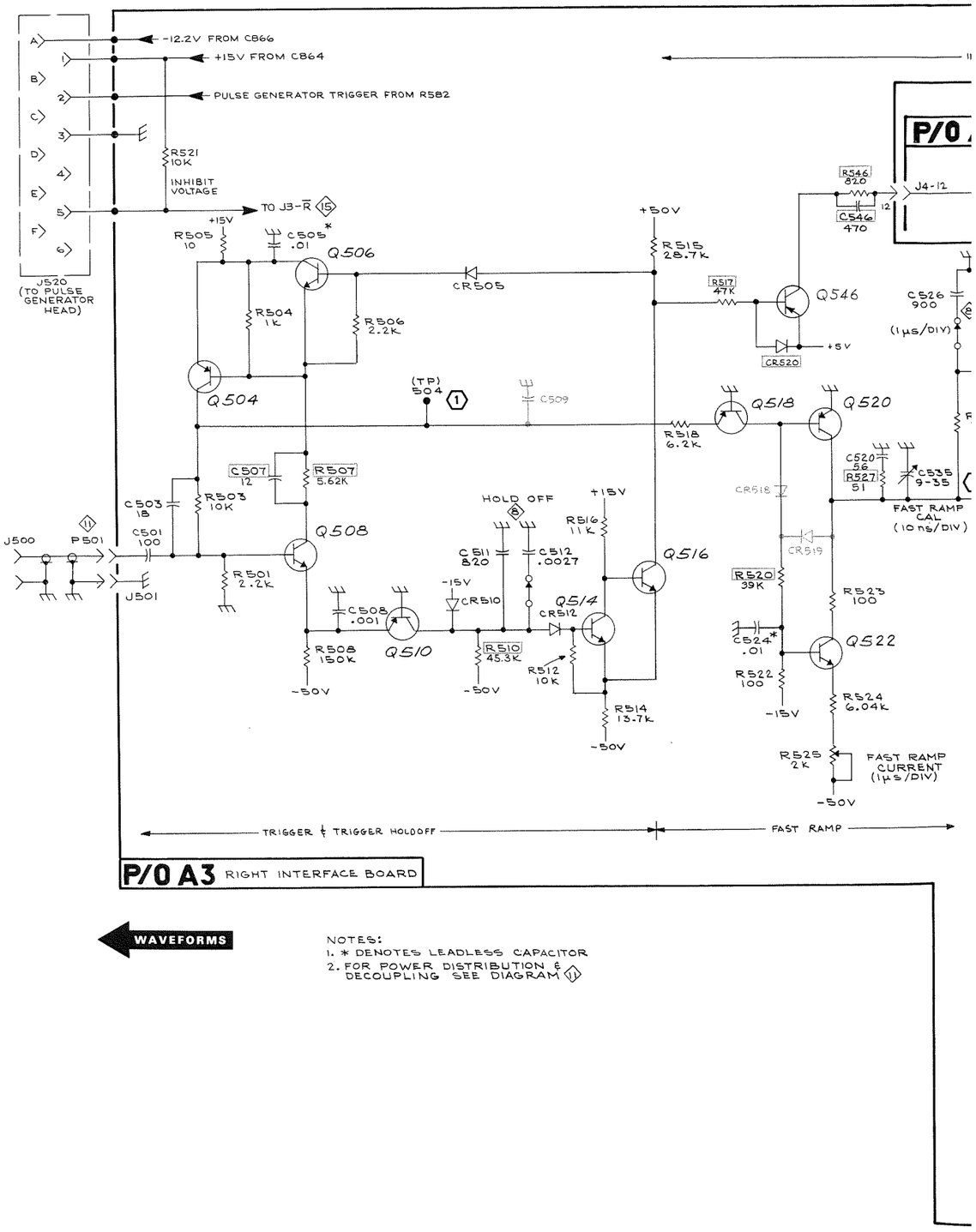

WAVEFORMS

NOTES:
1. * DENOTES LEADLESS CAPACITOR
2. FOR POWER DISTRIBUTION & DECOUPLING SEE DIAGRAM 11

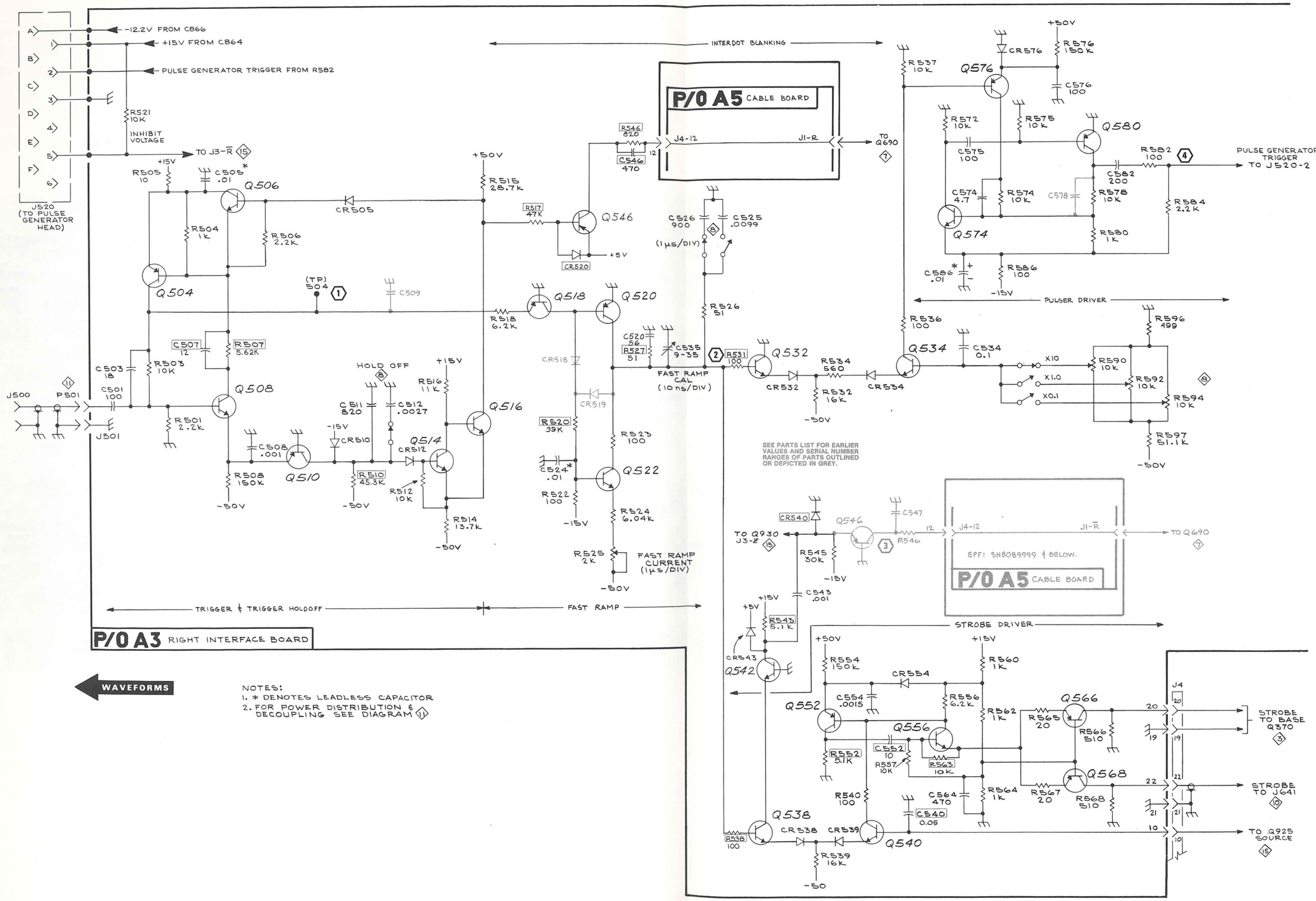

WAVEFORMS

NOTES:
1. * DENOTES LEADLESS CAPACITOR
2. FOR POWER DISTRIBUTION & DECOUPLING SEE DIAGRAM 11

TRIGGER, FAST RAMP, PULSER, STROBE DRIVERS & COMPARATORS
SN B020000-UP

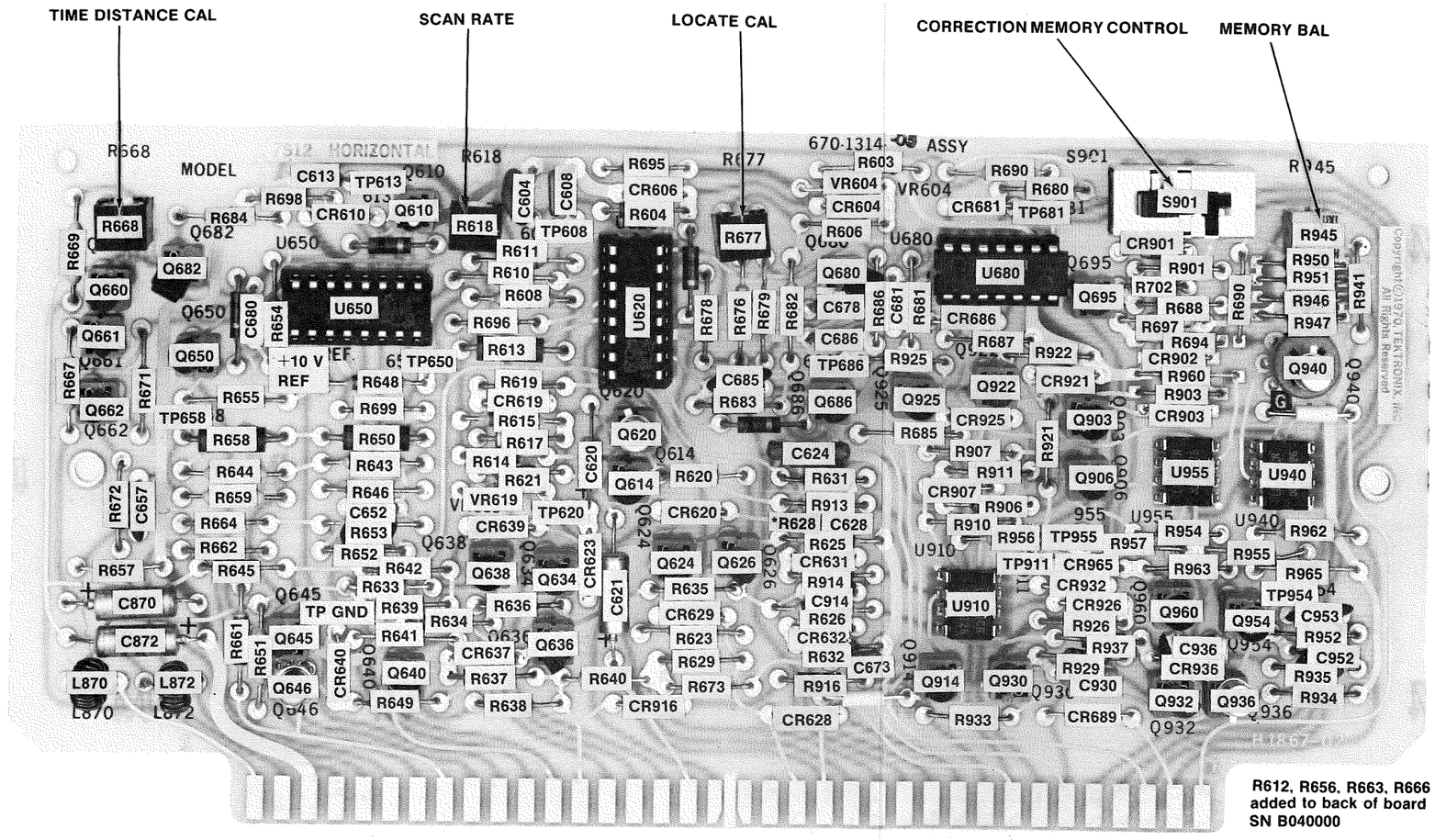

R612, R656, R663, R666 added to back of board SN B040000

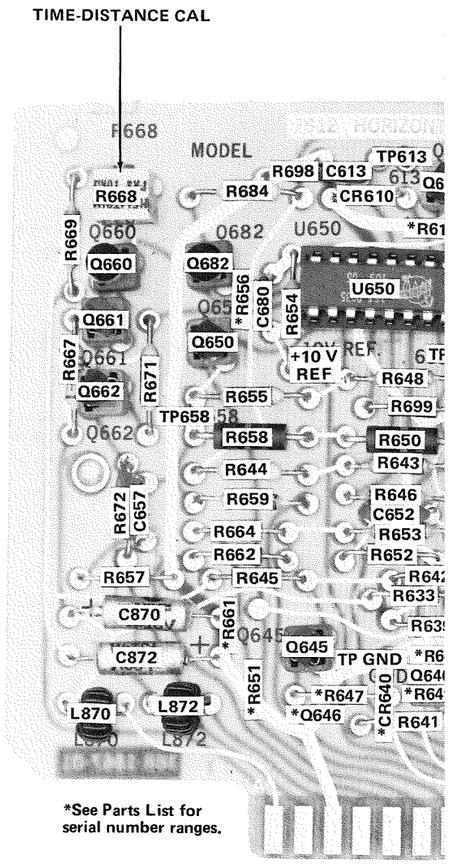

*See Parts List for serial number ranges.

ASSEMBLY A-4

Fig. 7-4a. Assembly A-4, Horizontal Card (SN B10000 & up).

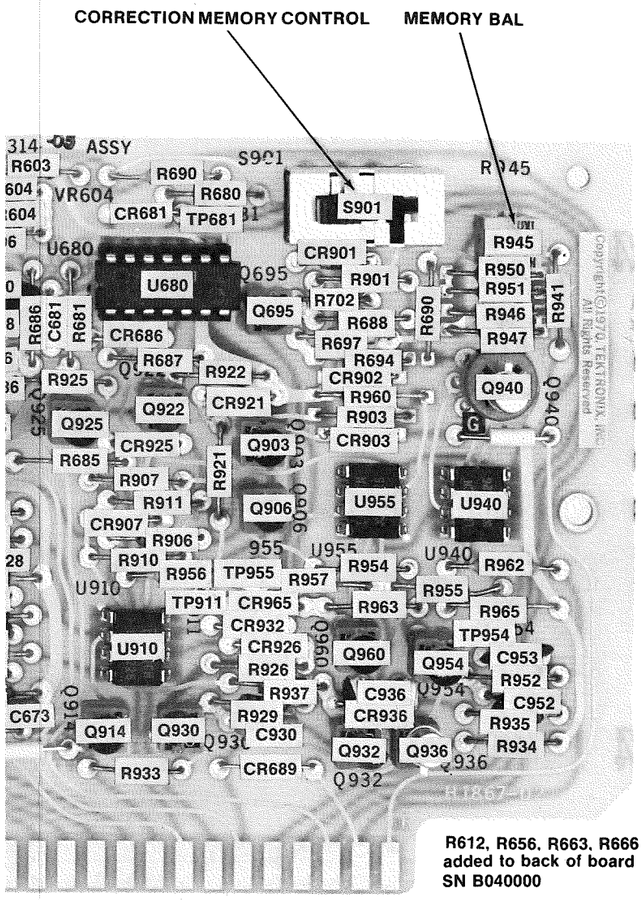

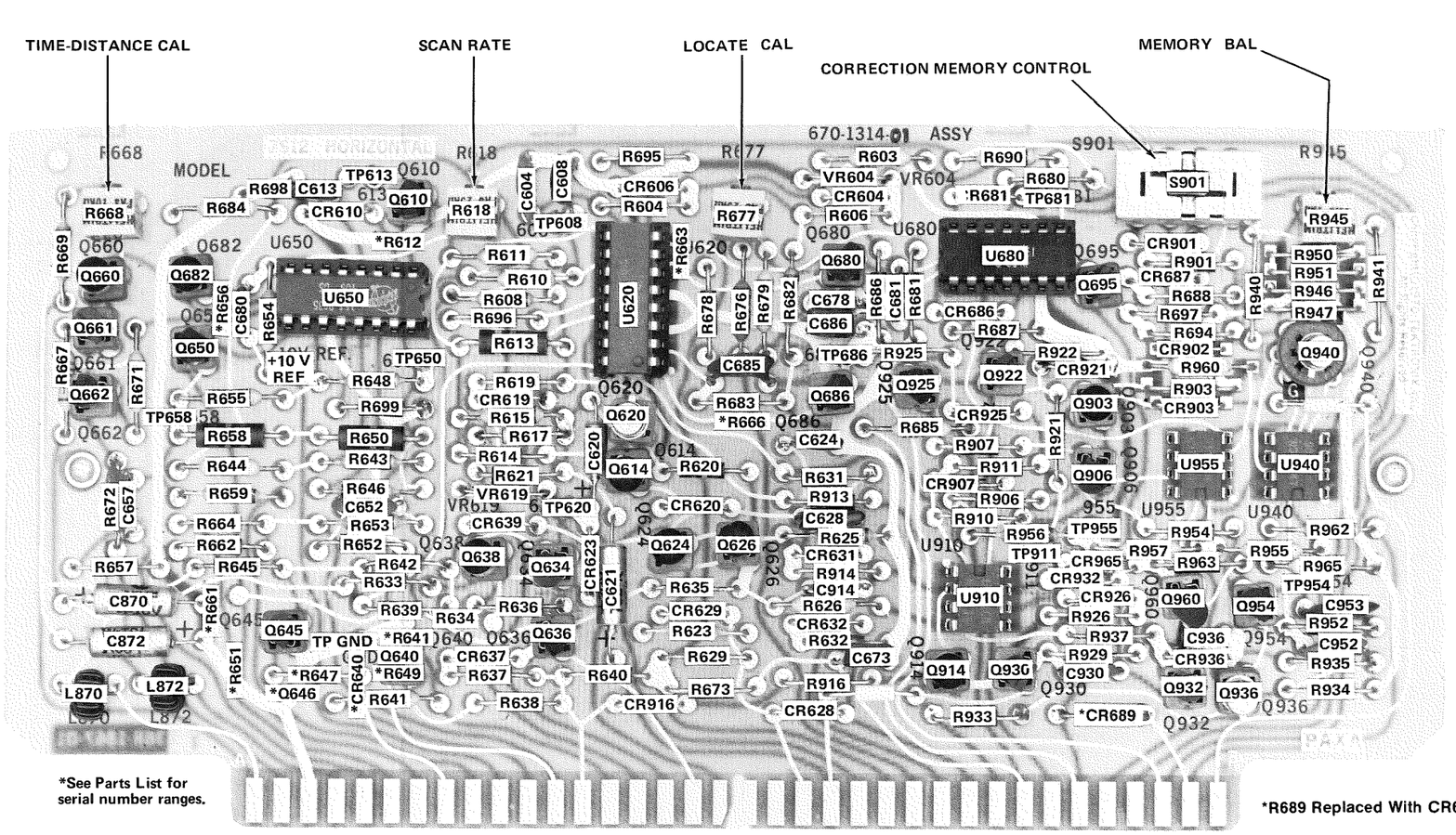

Fig. 7-4b. Assembly A-4, Horizontal Card (below SN B10000).

)00 & up).

1

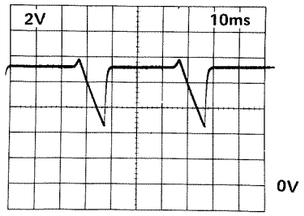

2

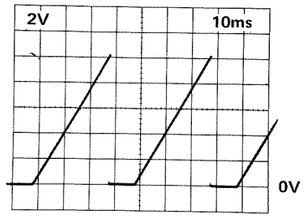

3

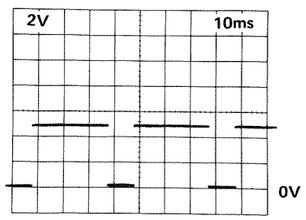

4

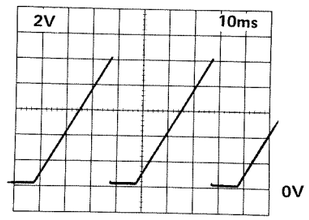

5

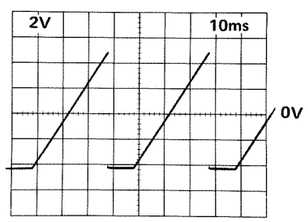

6

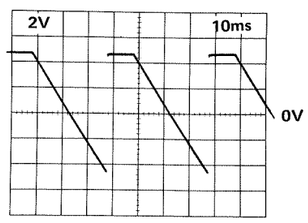

Test oscilloscope triggered from SWEEP OUT signal.
For other conditions see page 7-2.

WAVEFORMS

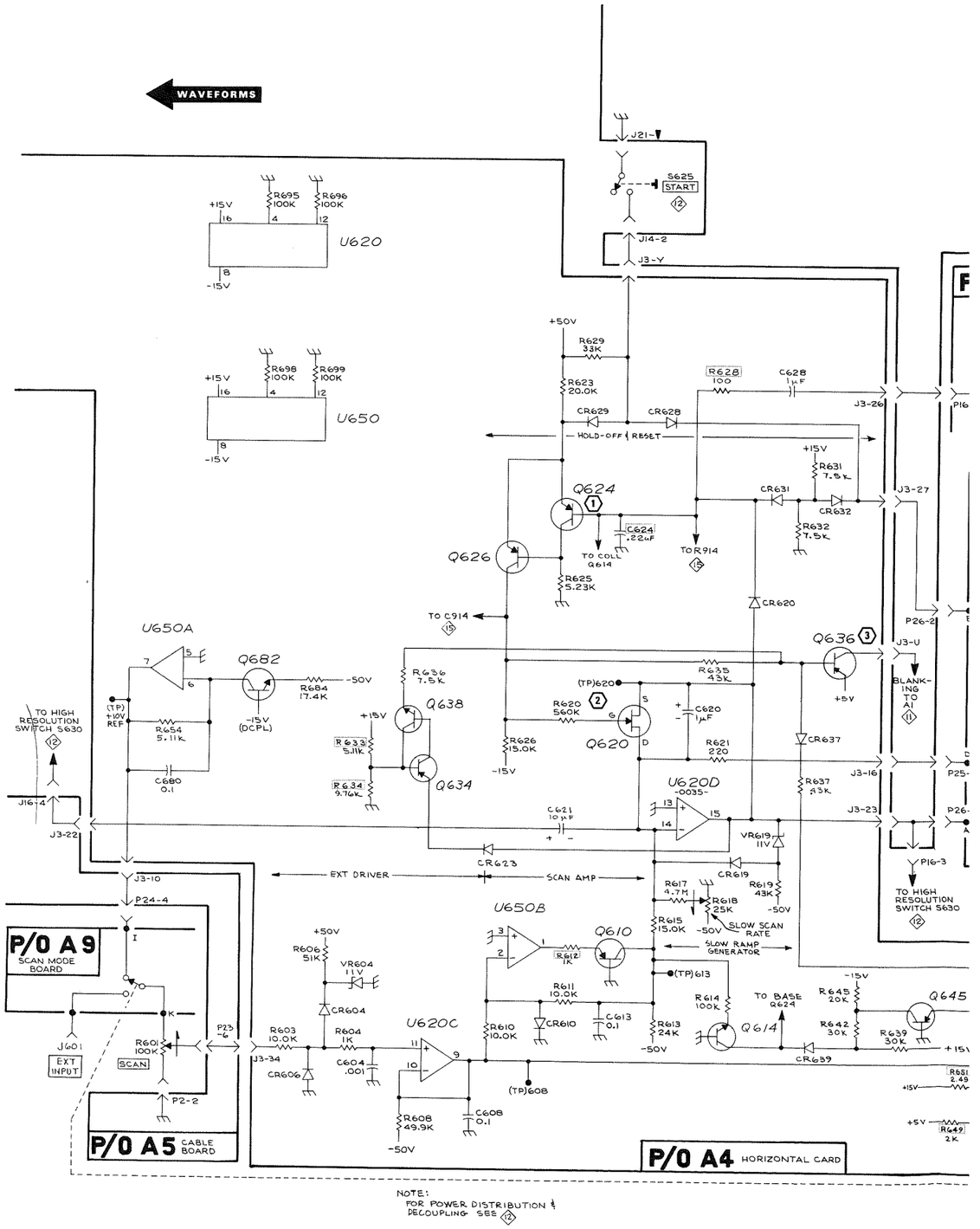

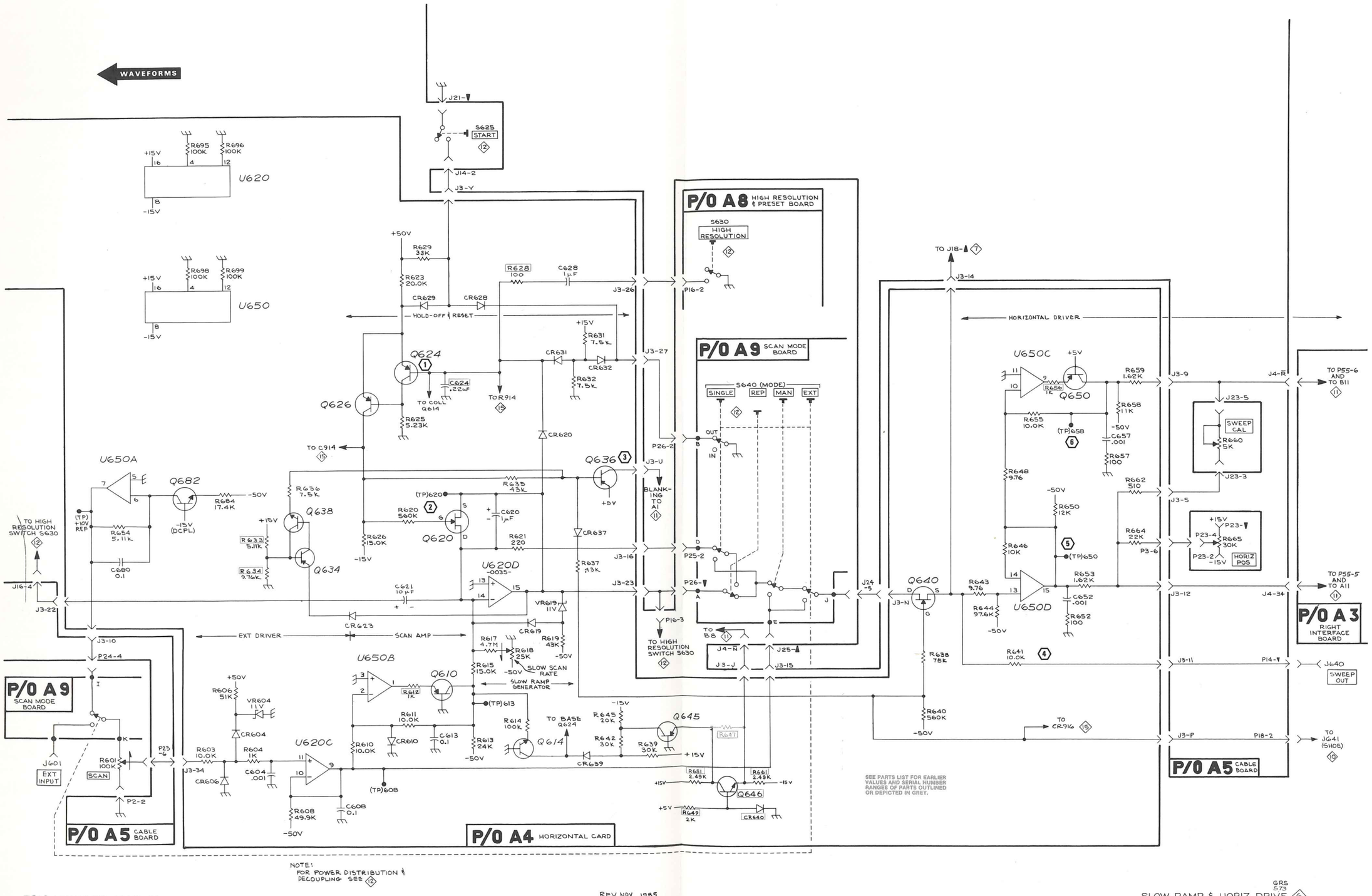

SEE PARTS LIST FOR EARLIER VALUES AND SERIAL NUMBER RANGES OF PARTS OUTLINED OR DEPICTED IN GREY.

NOTE:
FOR POWER DISTRIBUTION & DECOUPLING SEE 12

SLOW RAMP & HORIZ DRIVE 6
SN B020000-UP

GRS 573

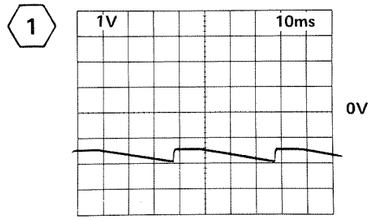

Test oscilloscope triggered from SWEEP OUT signal.
For other conditions see page 7-2.

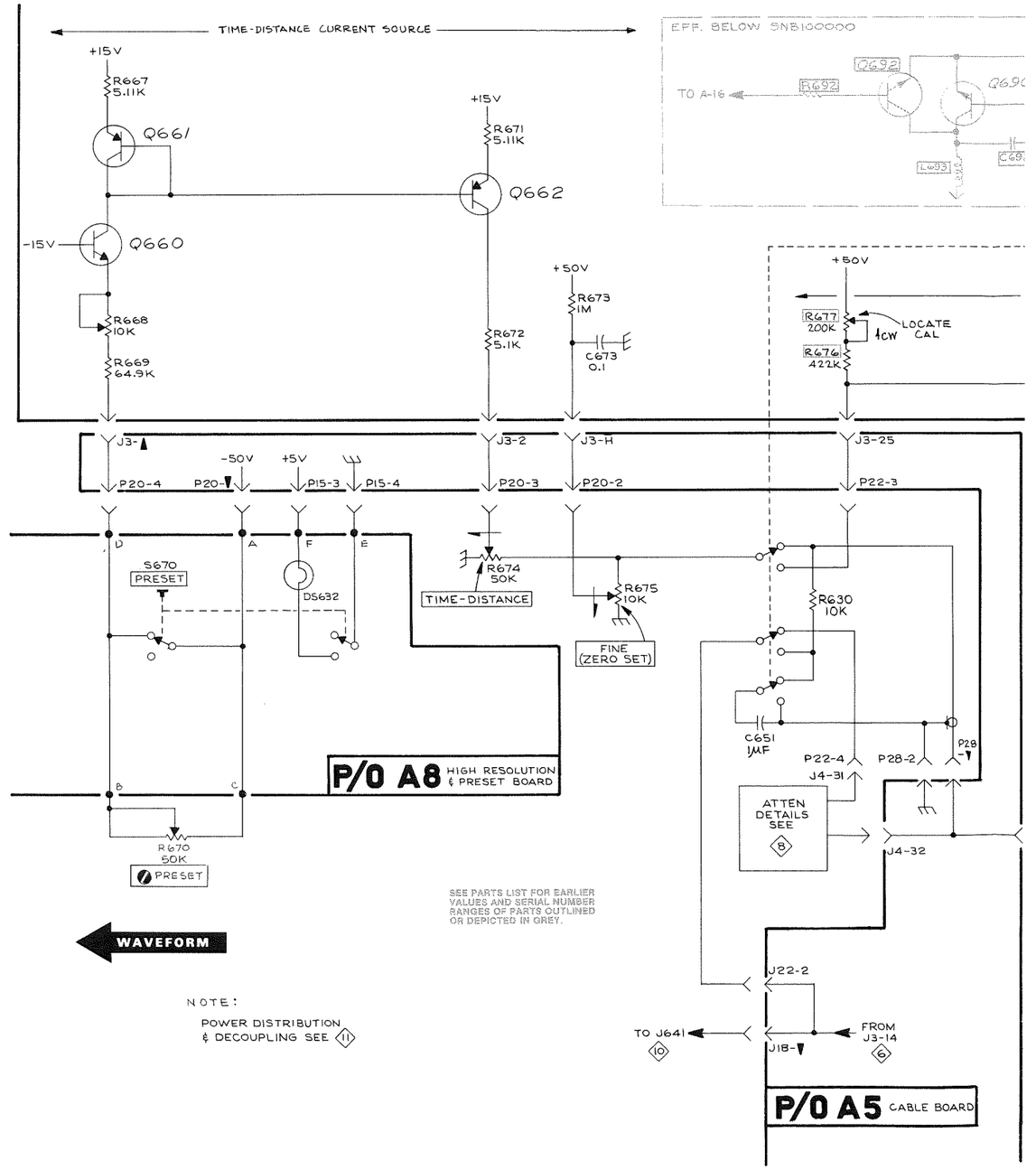

TIME-DISTANCE CURRENT SOURCE

+15V
R667 5.11K
Q661
Q660
-15V
R668 10K
R669 64.9K
+15V
R671 5.11K
Q662
R672 5.1K
+50V
R673 1M
C673 0.1

EFF. BELOW SN B100000
TO A-16
R692
Q692
Q690
R691
TO A17
TO B7
C692
L693

P/O A1 LEFT INTERFACE BOARD
+5V
R693 15K
B7
A16
A17
R691 430
R692 20K
Q694
Q692
CR692
P600 (NORMAL POSITION)
Q690
C692 .001μF
L693
S650 LOCATE

+50V
LOCATE INVERTER
R677 200K
1CW LOCATE CAL
R676 422K
U620B -0035-
R678 1K
R663 1K
Q680
R681 5.11K
C681 0.1
(TP)681
CR681
-15V
C678 0.1
R679 10.0K
R680 24K
-50V

J1-R
TO J4-12 AND R546 5
J3-P
CR689
R689
J3-31

+15V
Q695
R688 7.5K
+15V
CR687
R702 1K
R694 30K
R697 4.3K

J3-25
P22-3
J3-2
P20-3
J3-H
P20-2
J3-
P20-4
-50V
P20-
+5V
P15-3
P15-4
D
A
F
E
S670 PRESET
DS632
R674 50K
TIME-DISTANCE
R675 10K
FINE (ZERO SET)
R630 10K
C651 1μF
P22-4
J4-31
P28-2
P28
-
ATTEN DETAILS SEE 8
J4-32
P3-K
B
C
R670 50K
PRESET

P/O A8 HIGH RESOLUTION & PRESET BOARD

SEE PARTS LIST FOR EARLIER VALUES AND SERIAL NUMBER RANGES OF PARTS OUTLINED OR DEPICTED IN GREY.

WAVEFORM

NOTE:
POWER DISTRIBUTION & DECOUPLING SEE 11

J22-2
TO J641 10
J18-
FROM J3-14 6

P/O A5 CABLE BOARD

RAMP INVERTER
LOCATE INTENSIFIER

+50V
R682 499K
U620A -0035-
(TP)686
Q686
R683 1K
R666 1K
CR686
-15V
C685 .01
R685 10K
C686 2μF
TO DRAIN OF Q 925 15
R686 16K
-50K
R690 44.2K
-50V
R687 18K
U680 3051
-15V
J3-32
J3-33
J3-T
J3-M
J4-29
J4-30
R_T
TIMING SWITCH DETAIL SEE 8

P/O A3 RIGHT INTERFACE BOARD

P/O A4 HORIZONTAL BOARD

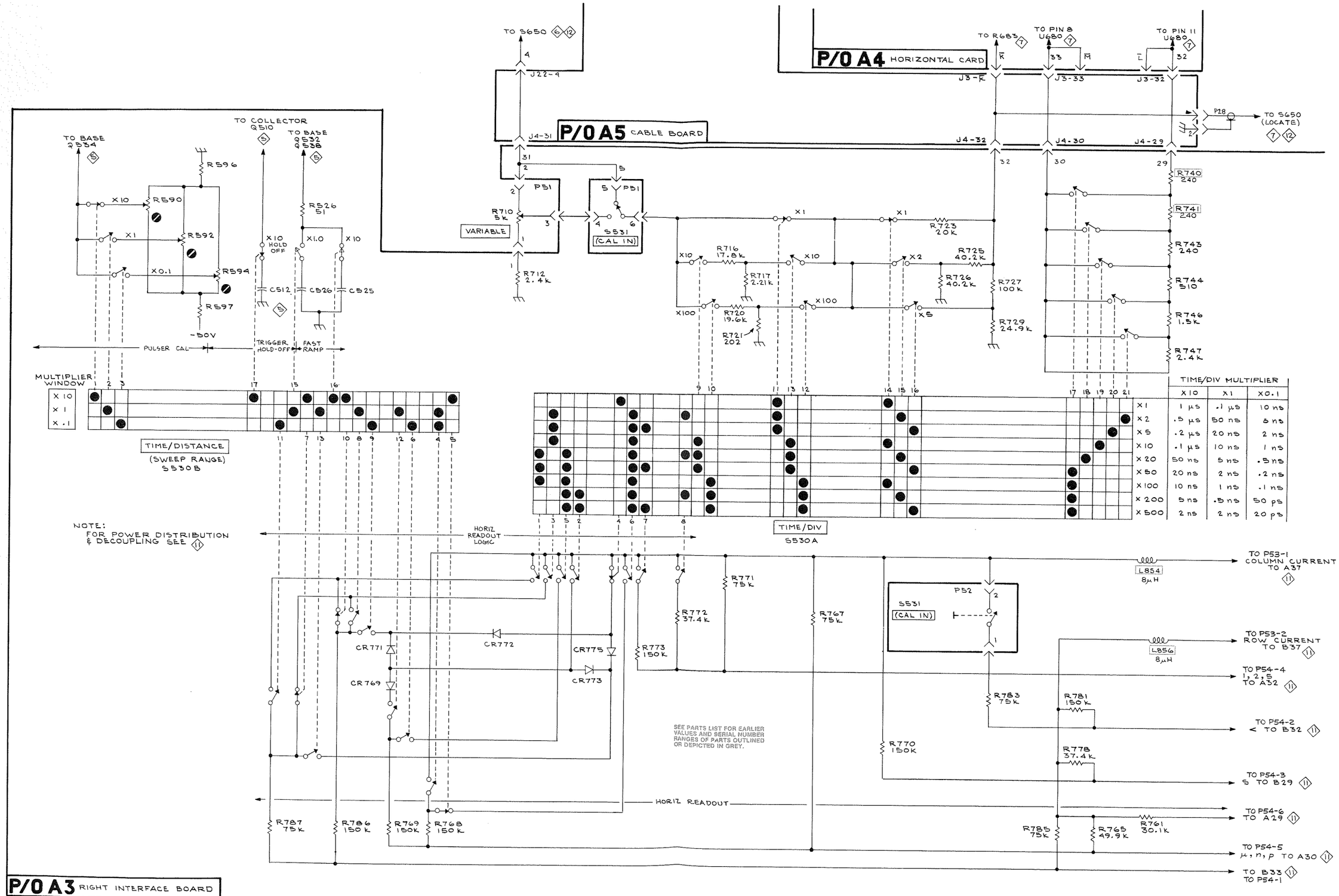

TIME/DIV MULTIPLIER			
	X10	X1	X0.1
X1	1 μs	.1 μs	10 ns
X2	.5 μs	50 ns	5 ns
X5	.2 μs	20 ns	2 ns
X10	.1 μs	10 ns	1 ns
X20	50 ns	5 ns	.5 ns
X50	20 ns	2 ns	.2 ns
X100	10 ns	1 ns	.1 ns
X200	5 ns	.5 ns	50 ps
X500	2 ns	2 ns	20 ps

7S12 SAMPLING UNIT

REV AUG 1984

TIMING SWITCHES & HORIZ READOUT LOGIC 8

SN B020000-UP

hq 971

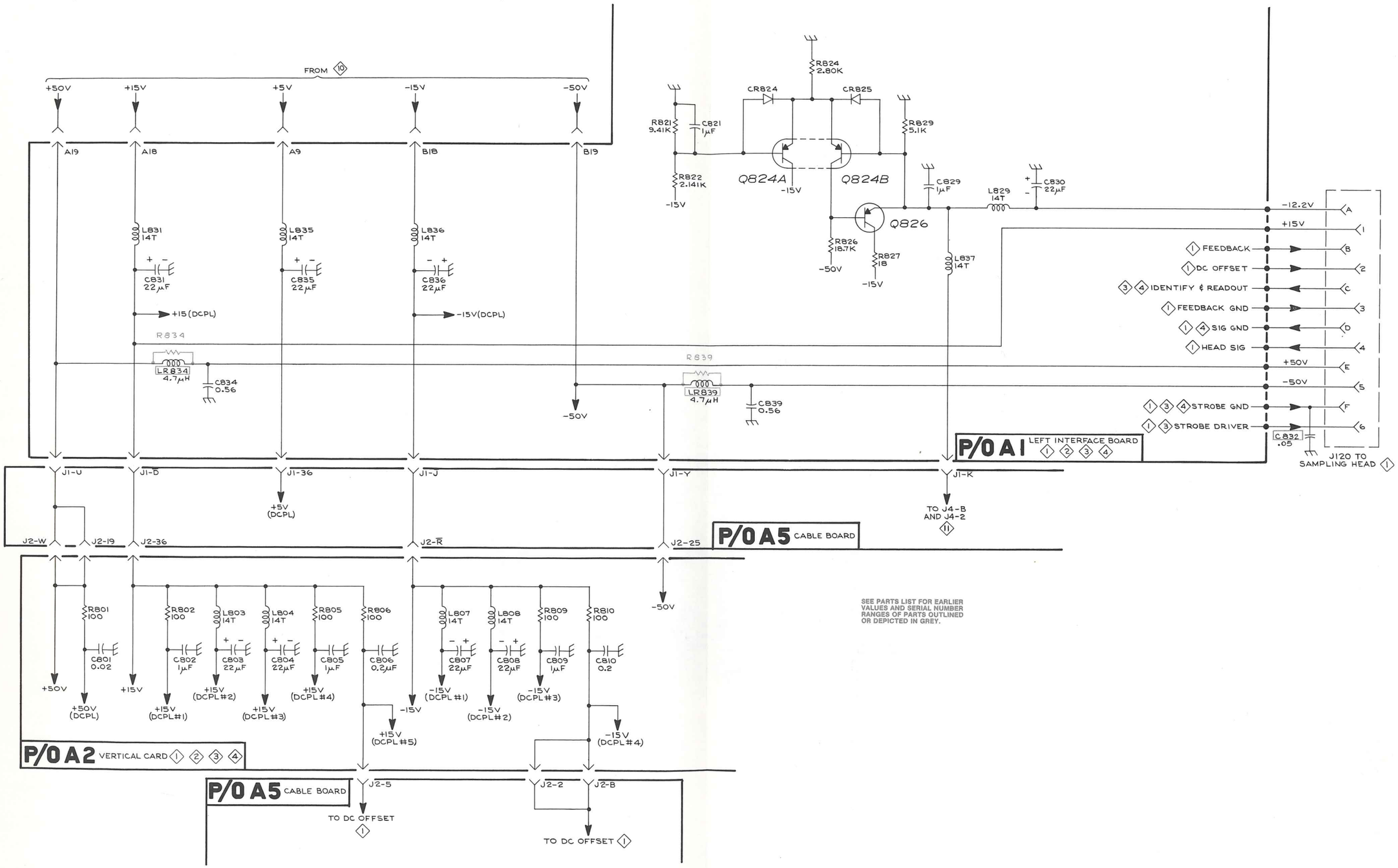

SEE PARTS LIST FOR EARLIER VALUES AND SERIAL NUMBER RANGES OF PARTS OUTLINED OR DEPICTED IN GREY.

VERTICAL POWER DISTRIBUTION & DECOUPLING 9 GRS 573
SN B020000-UP

P10 Blk 2 pin conn
1 Brn on wht
2 Red on wht

P11 Brn 4 pin conn
1 Brn on wht
2 Red on wht
3 Orn on wht
4 Yel on wht

P12 Red 3 pin conn
1 Brn on wht
2 Red on wht
3 Orn on wht

P13 Orn 3 pin conn
1 Brn on wht
2 Red on wht
3 Orn on wht

P14 Yel 2 pin conn
1 Brn on wht
2 Red on wht

P15 Grn 4 pin conn
1 Brn on wht
2 Red on wht
3 Orn on wht
4 Yel on wht

P16 Blu 4 pin conn
1 Brn on wht
2 Red on wht
3 Orn on wht
4 Yel on wht

P17 Vio 2 pin conn
1 Brn on wht
2 Red on wht

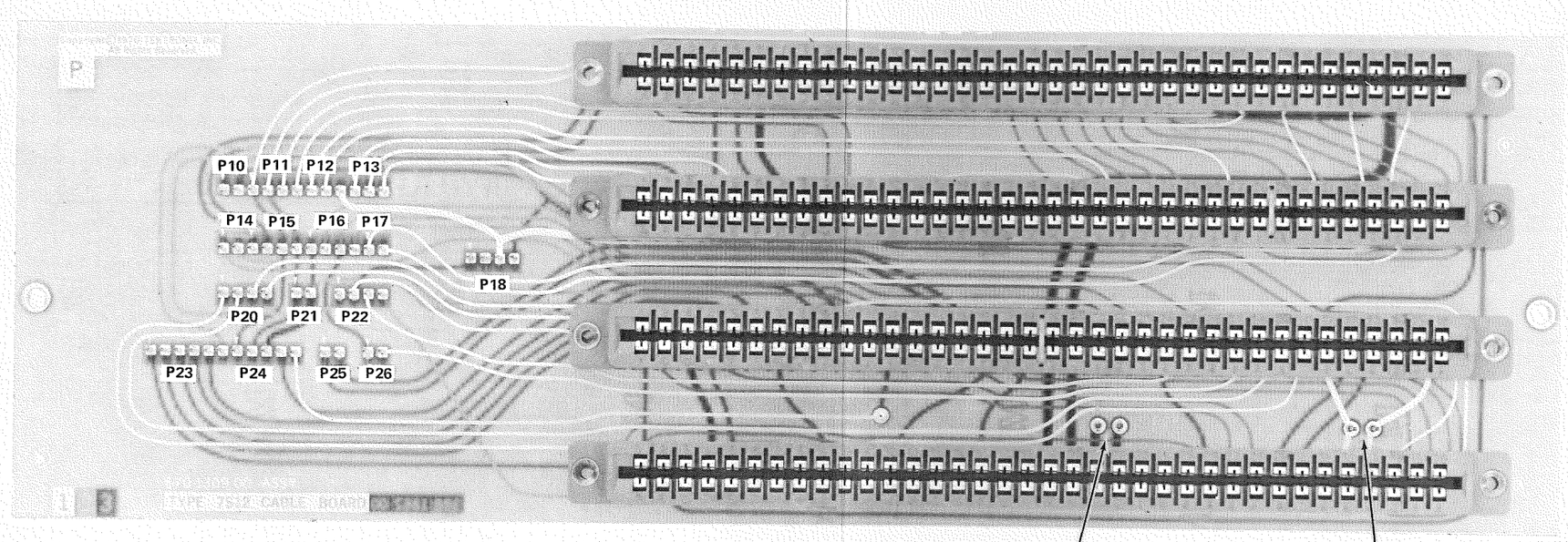

P20 Blk 4 pin conn
1 Brn on wht
2 Red on wht
3 Orn on wht
4 Yel on wht

P21 Brn 2 pin conn
1 Brn on wht
2 Red on wht

P22 Red 4 pin conn
1 Brn on wht
2 Red on wht
3 Orn on wht
4 Yel on wht

P18 Gry 4 pin conn
1 Brn on wht
2 Red on wht
3 Shield
4 Vio on wht (50 Ω Coax)

P23 Orn 6 pin conn
1 Brn on wht
2 Red on wht
3 Orn on wht
4 Yel on wht
5 Grn on wht
6 Blu on wht

P24 Yel 5 pin conn
1 Brn on wht
2 Red on wht
3 Orn on wht
4 Yel on wht
5 Grn on wht

P25 Grn 2 pin conn
1 Brn on wht
2 Red on wht

P26 Blu 2 pin conn
1 Brn on wht
2 Red on wht

P27 Gry 2 pin conn
1 Shield
2 Grn on wht (50 Ω Coax)

P28 Wht 2 pin conn
1 Blu on wht (50 Ω Coax)
2 Shield

Fig. 7-5. Assembly A-5, Cable Board.

A1

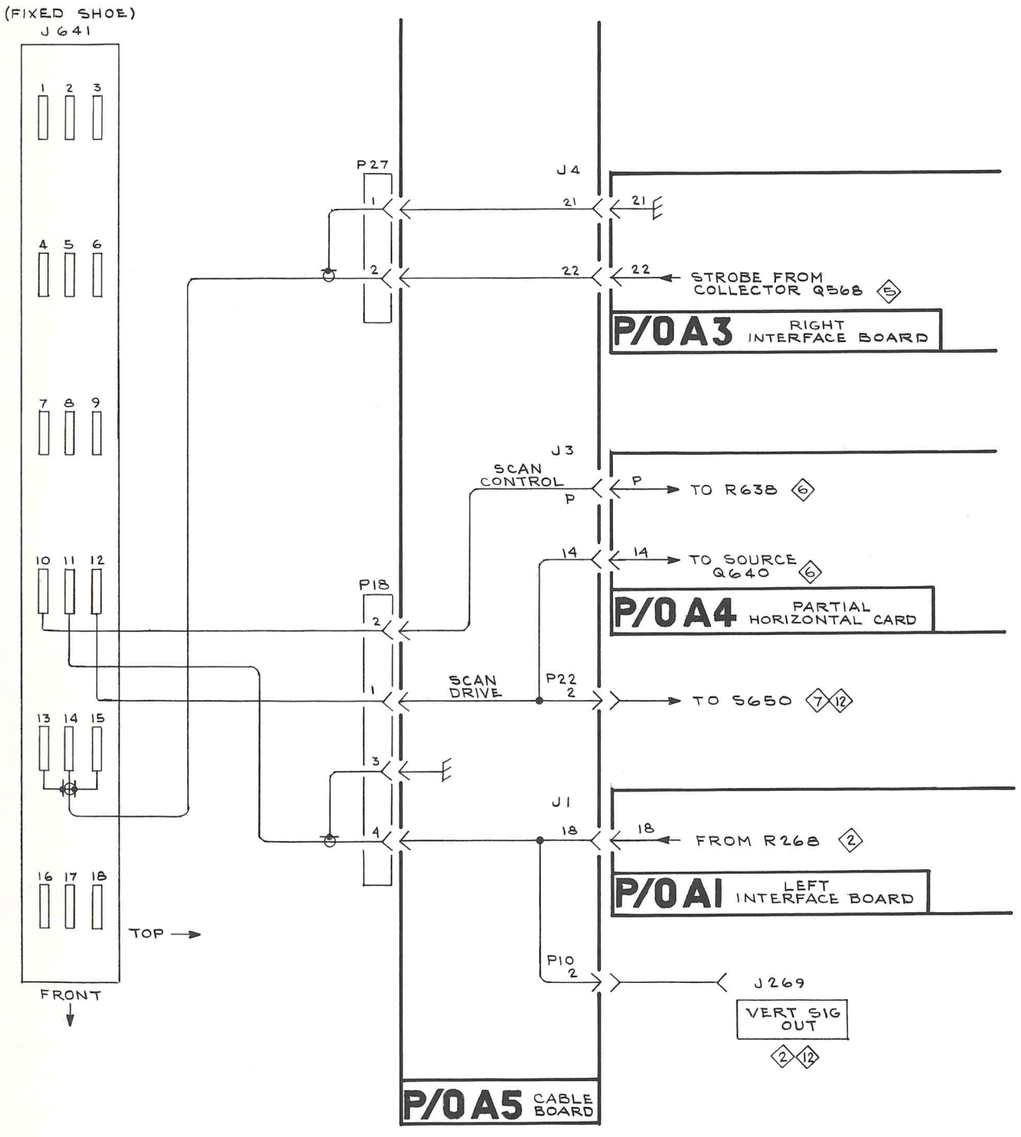

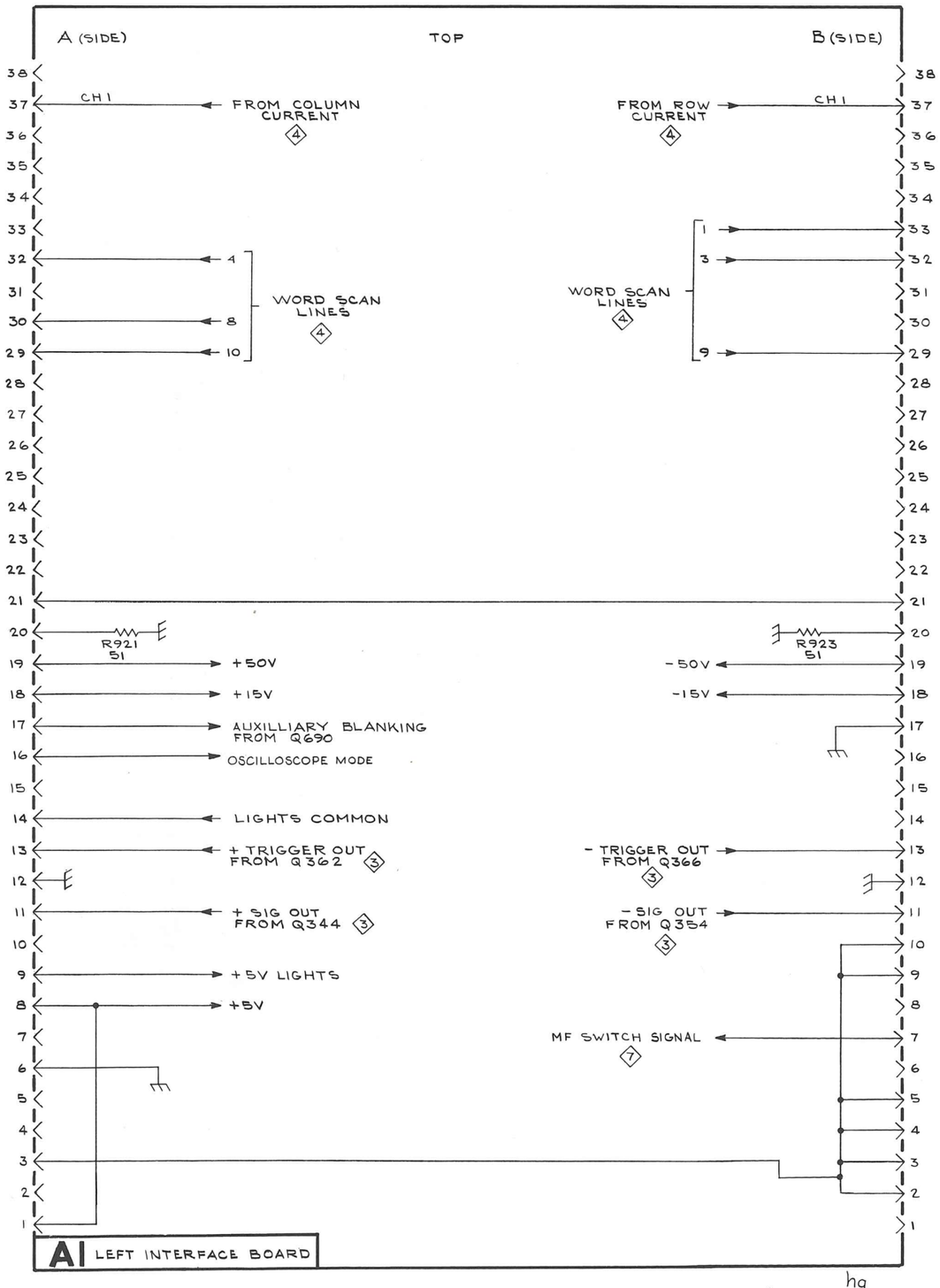

hq

VERTICAL OUTPUT CONNECTORS 10

SN B020000-UP

971

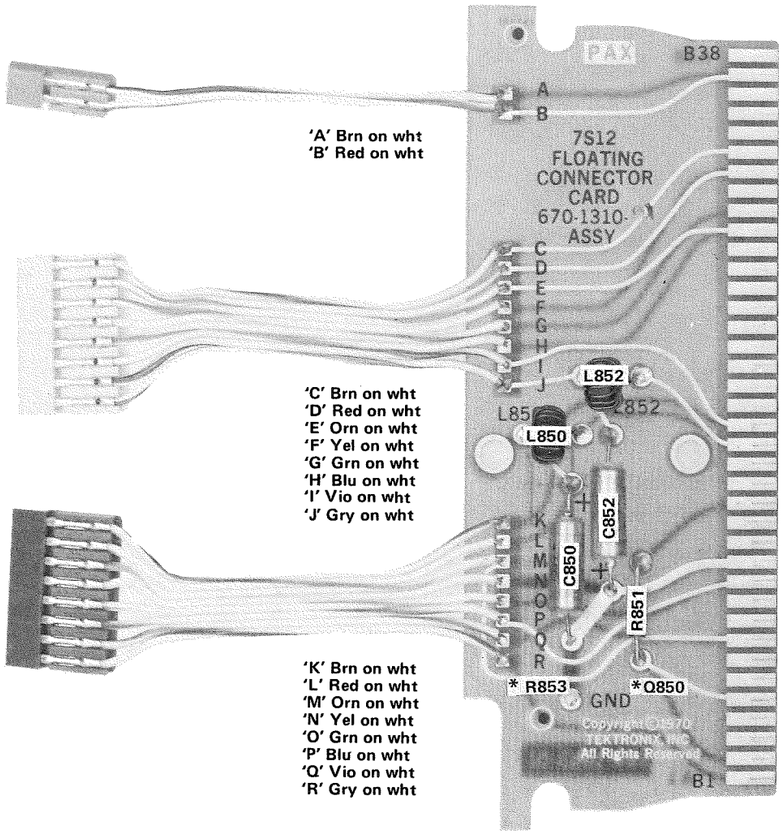

*See Parts List for serial number ranges.

Fig. 7-6. Assembly A-6, Floating Connecting Board.

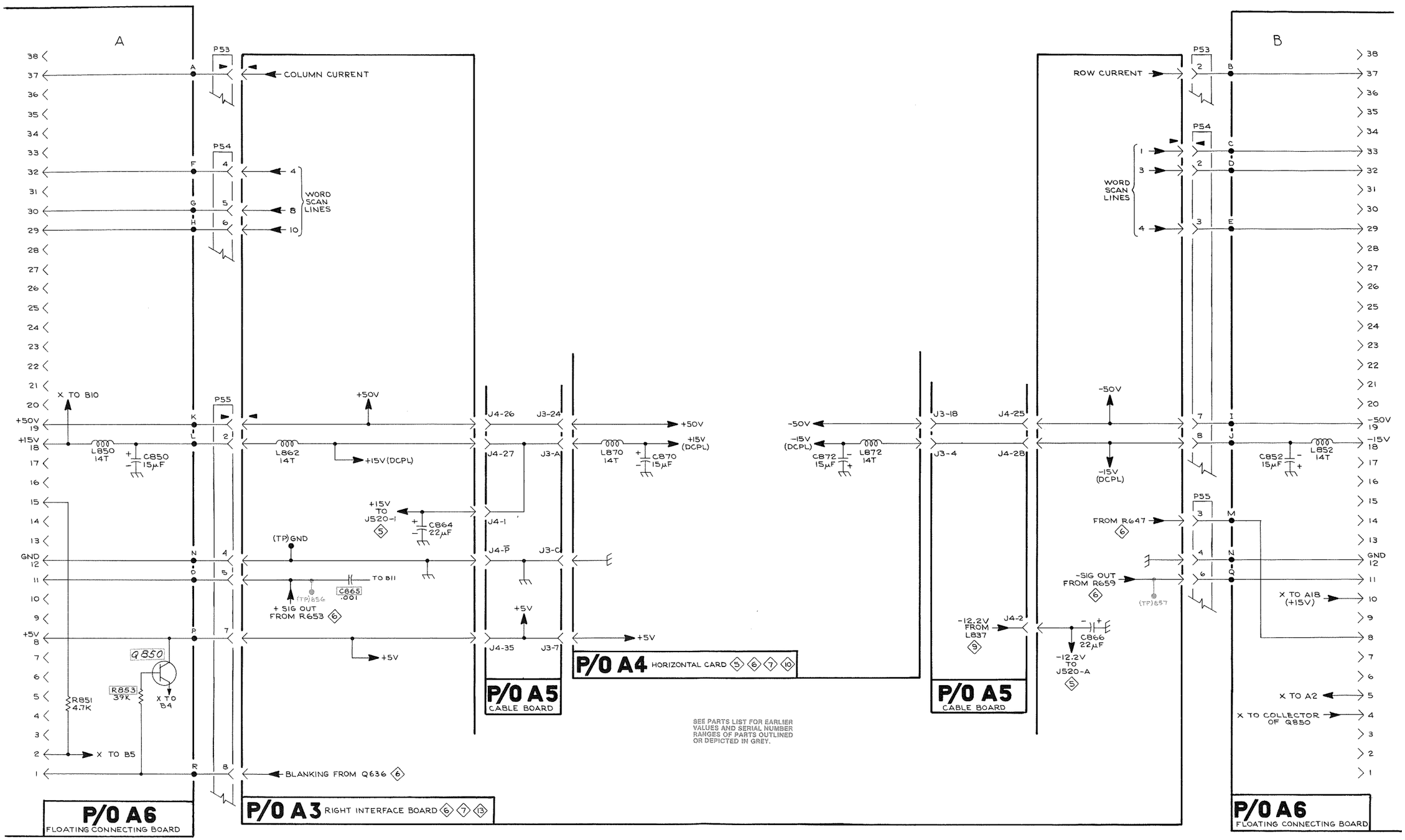

SEE PARTS LIST FOR EARLIER VALUES AND SERIAL NUMBER RANGES OF PARTS OUTLINED OR DEPICTED IN GREY.

7S12

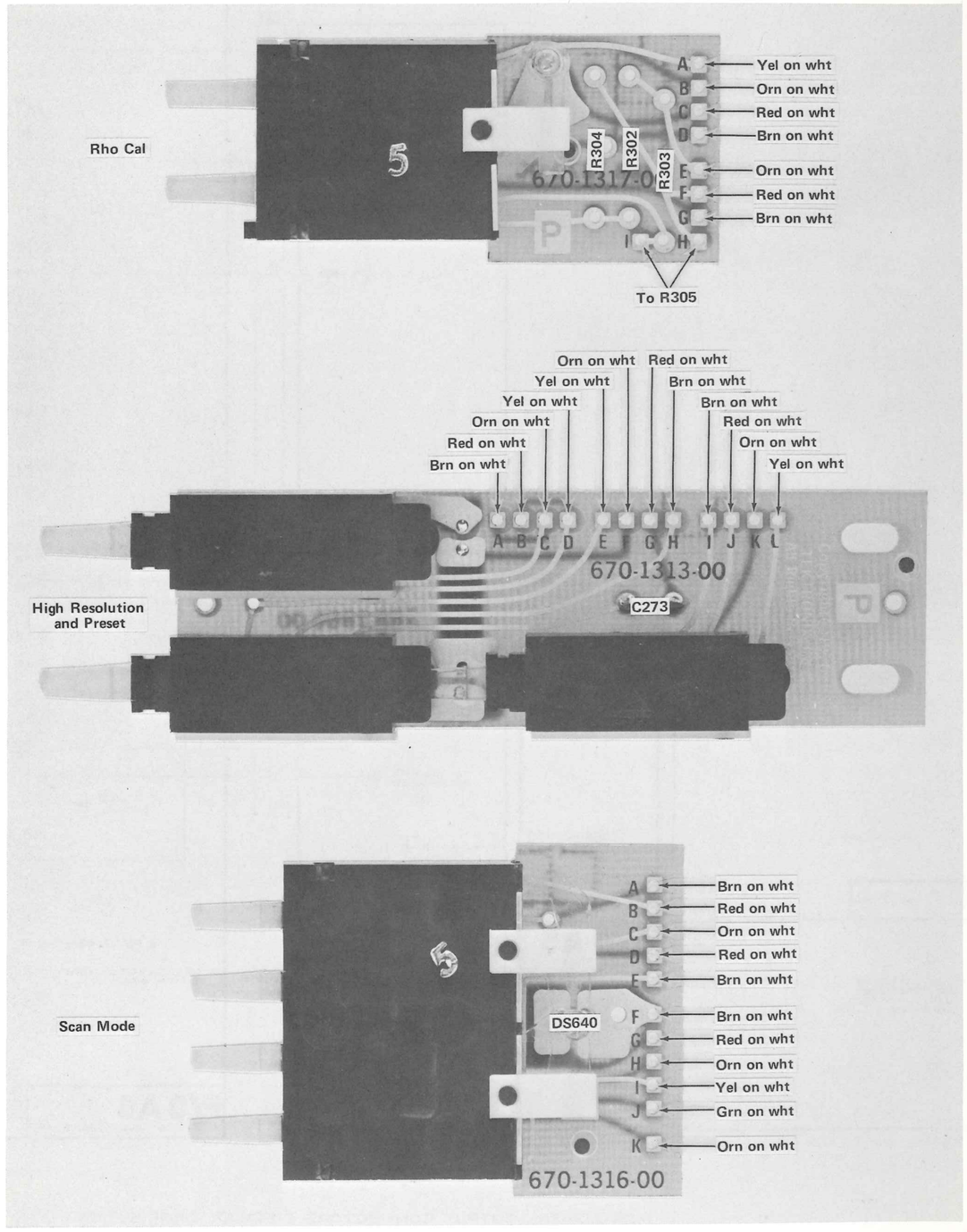

Fig. 7-7. Assemblies A-7, A-8, and A-9.

A

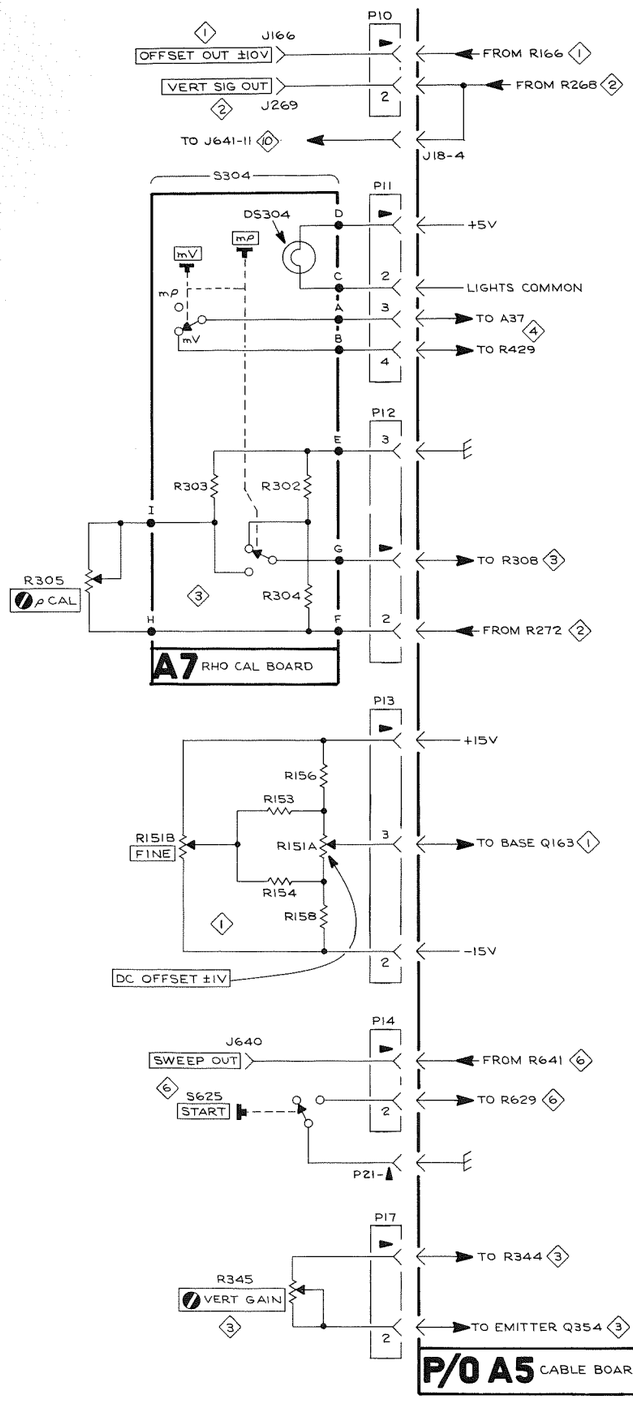

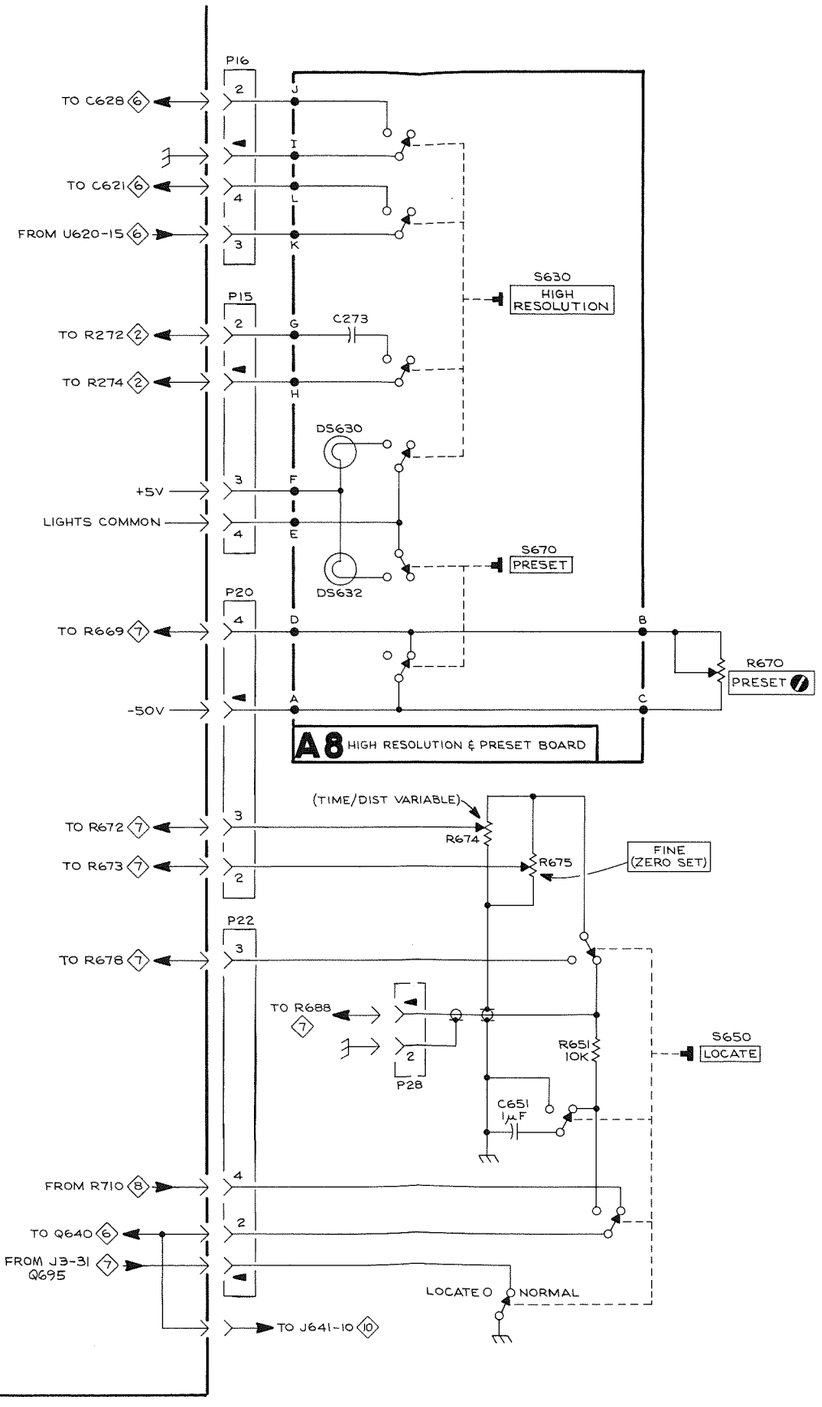

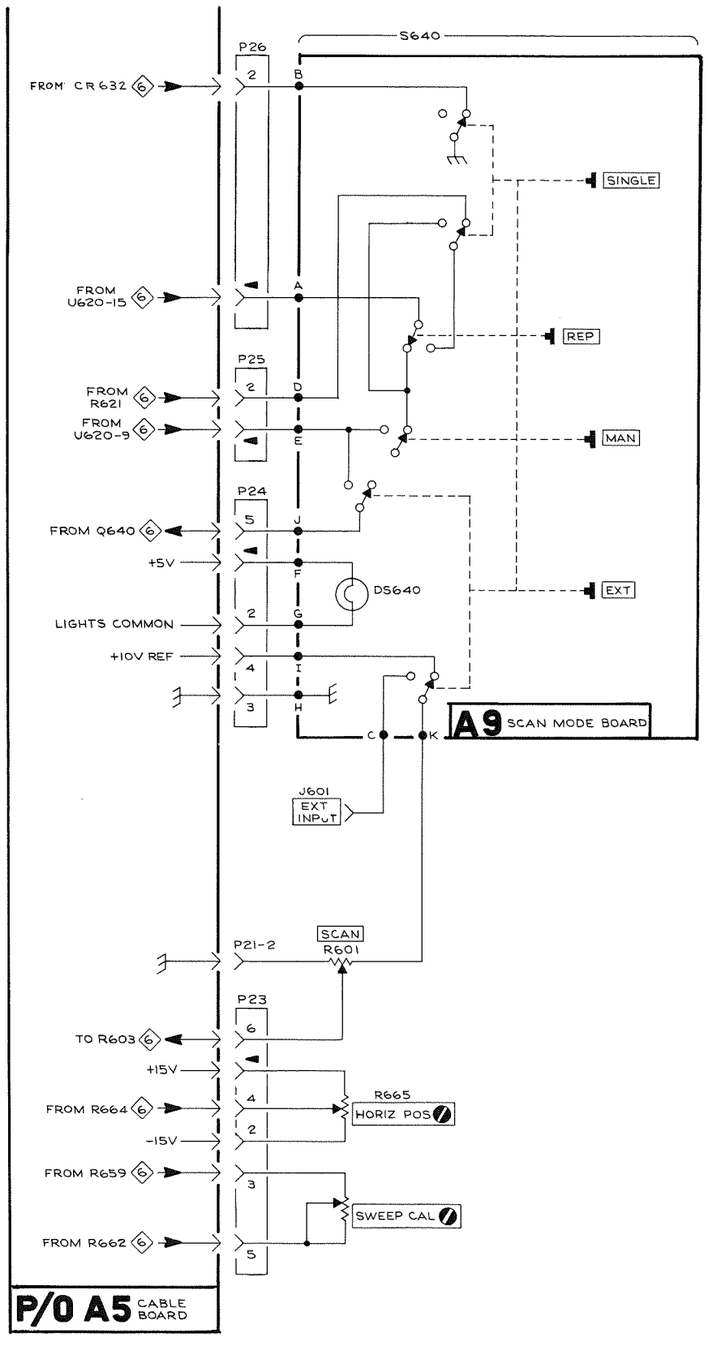

7512 SAMPLING PLUG-IN

REV AUG 1984

FRONT PANEL CONTROLS & CONNECTORS 12 GRS 971
SN B020000-UP

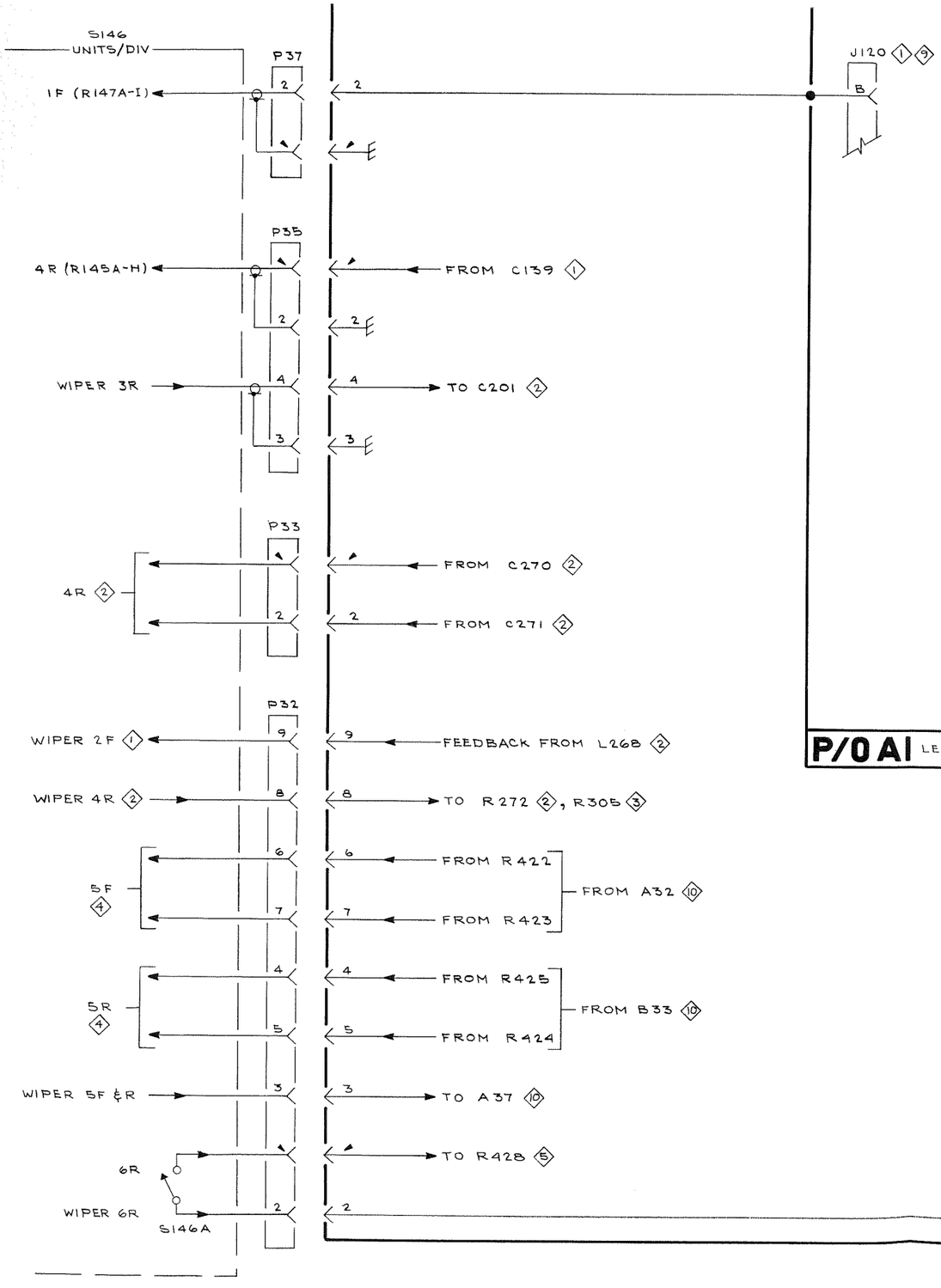
S146
UNITS/DIV
P37
1F (R147A-I)
2
J120 1 9
B
P35
4R (R145A-H)
FROM C139 1
WIPER 3R
TO C201 2
P33
4R 2
FROM C270 2
FROM C271 2
P32
WIPER 2F 1
FEEDBACK FROM L268 2
WIPER 4R 2
TO R272 2, R305 3
5F 4
FROM R422
FROM R423
FROM A32 10
5R 4
FROM R425
FROM R424
FROM B33 10
WIPER 5F &R
TO A37 10
TO R428 5
6R
WIPER 6R
S146A
P/O A1 LEFT INTERFACE BOARD

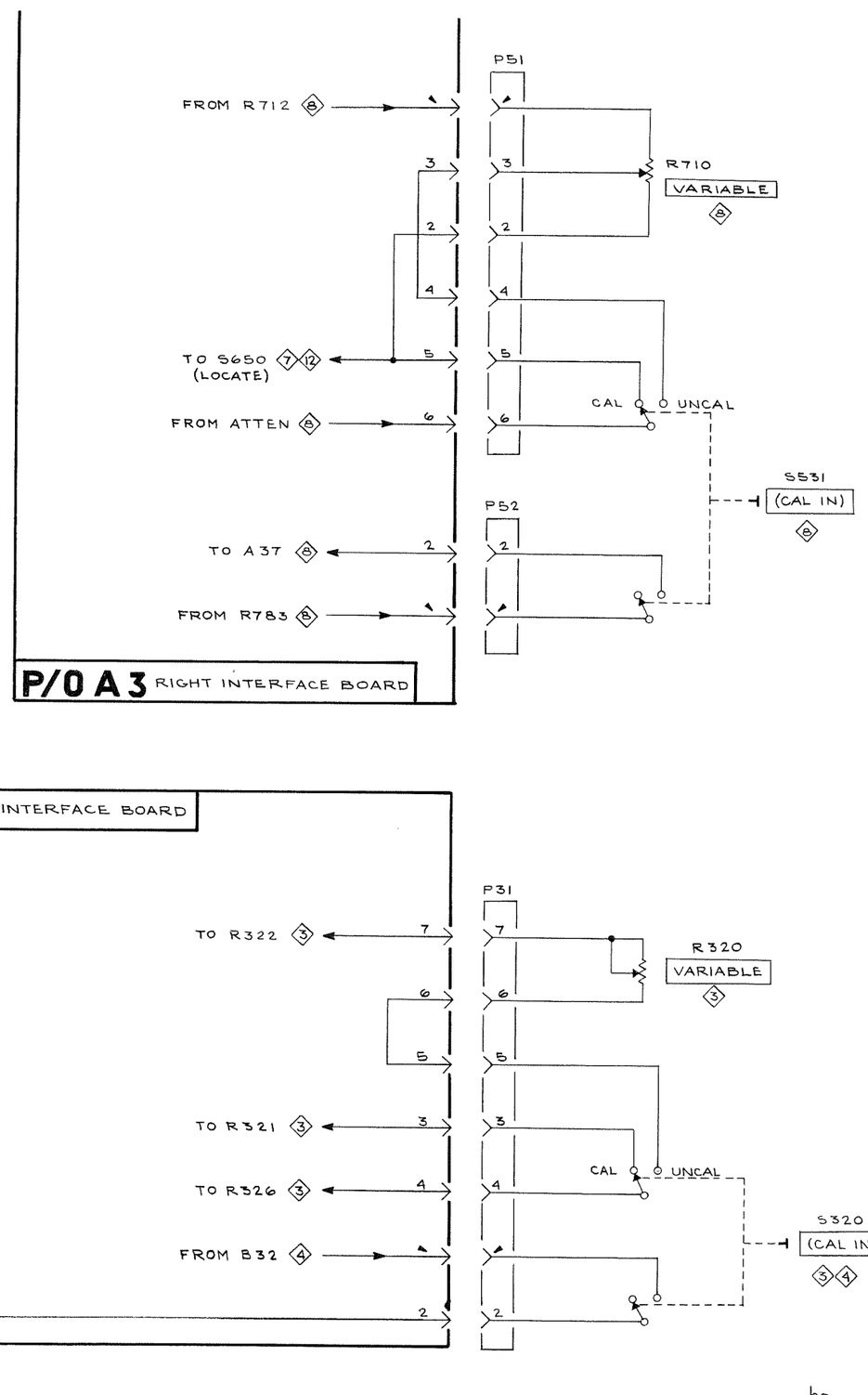
P51
FROM R712 8
R710
VARIABLE
8
TO S650 (LOCATE) 7 12
CAL
UNCAL
FROM ATTEN 8
S531
(CAL IN)
8
P52
TO A37 8
FROM R783 8
P/O A3 RIGHT INTERFACE BOARD
P31
TO R322 3
R320
VARIABLE
3
TO R321 3
TO R326 3
CAL
UNCAL
S320
(CAL IN)
3 4
FROM B32 4

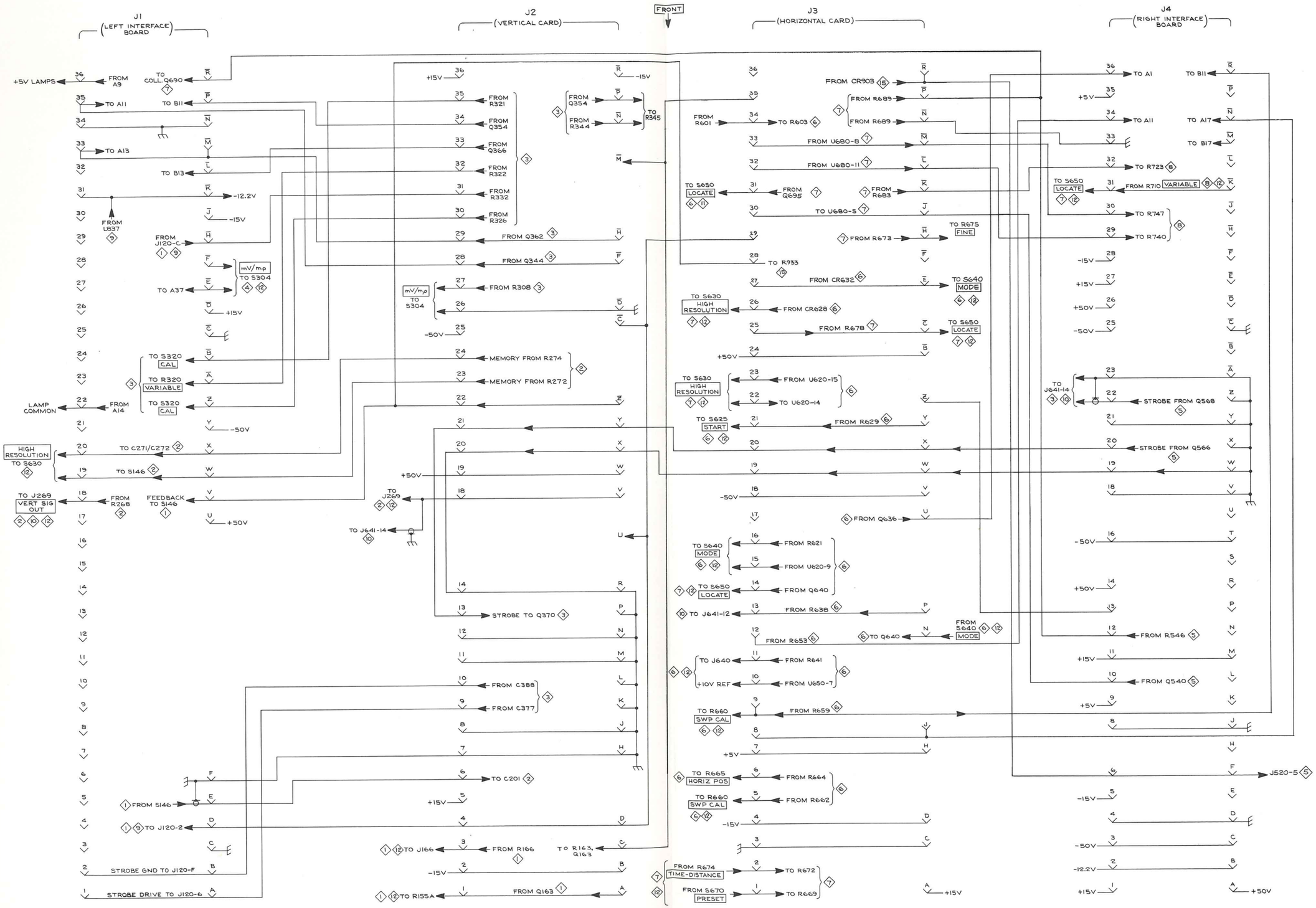

NOTE:
TOP VIEW OF BOARD

7S12 SAMPLING PLUG-IN

REV JUN 1983

GRS 971
CABLE BOARD DETAILS 14
SN B020000-UP

1

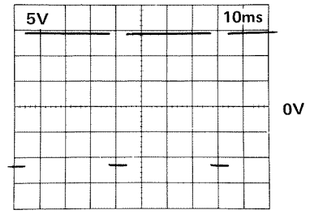

2

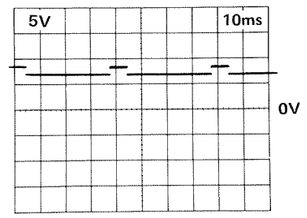

3

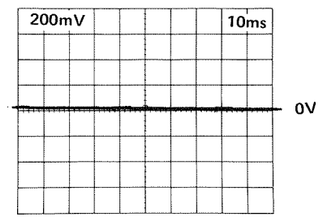

Test oscilloscope triggered from SWEEP OUT signal. For other conditions see page 7-2.

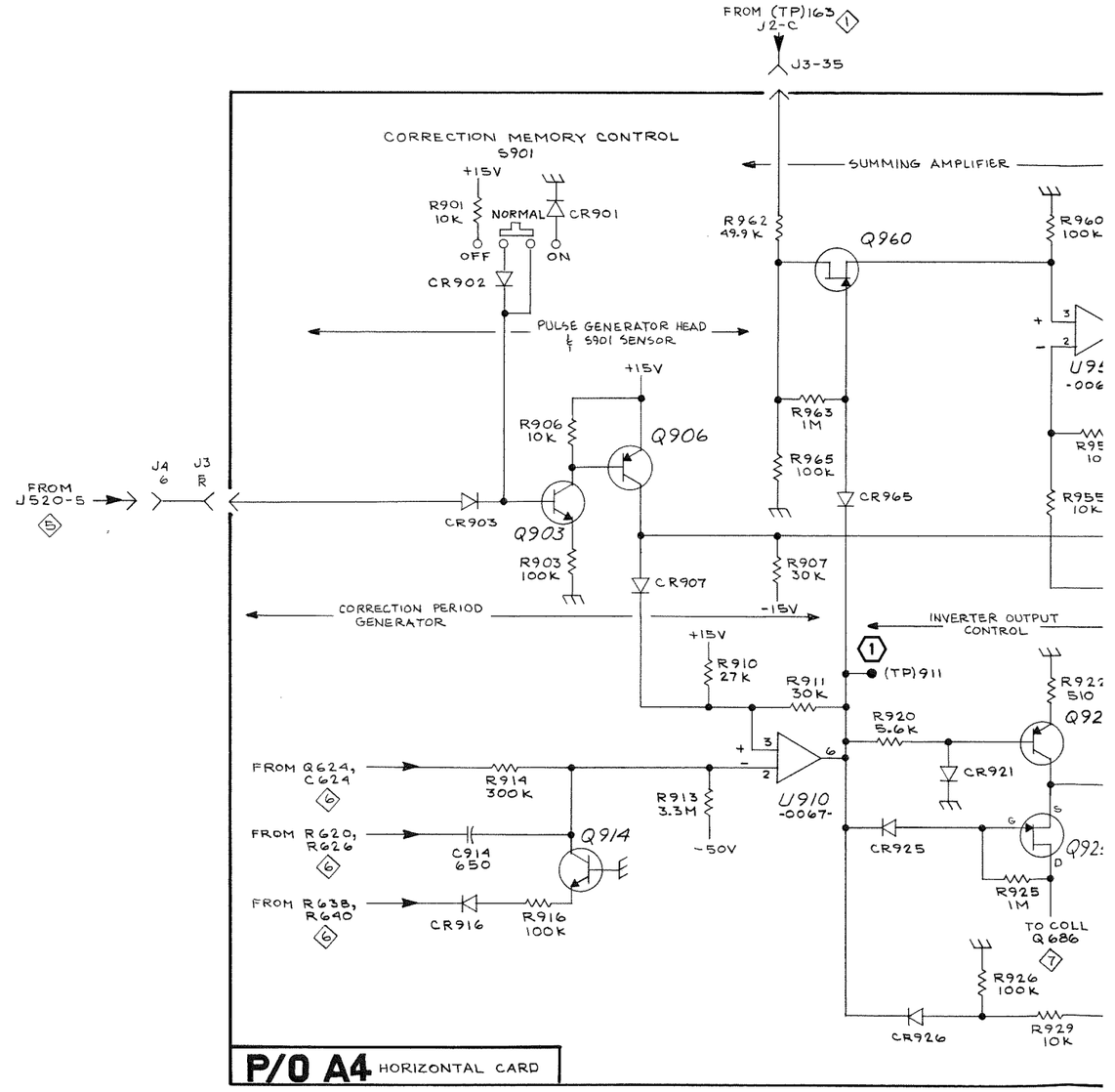

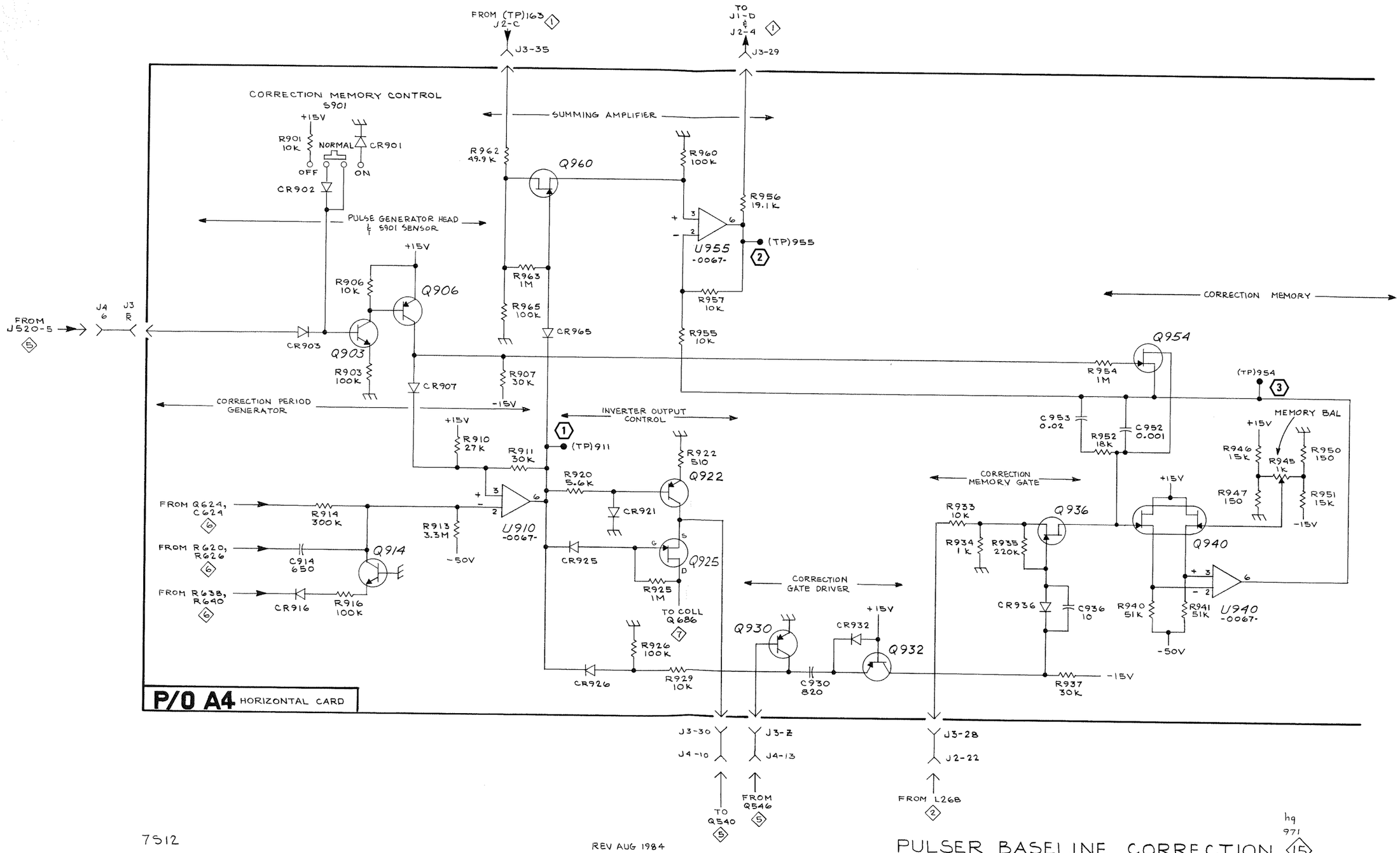

7S12

REV AUG 1984

hq
971

PULSER BASELINE CORRECTION 15

SN B020000-UP

REPLACEABLE MECHANICAL PARTS

PARTS ORDERING INFORMATION

Replacement parts are available from or through your local Tektronix, Inc. Field Office or representative.

Changes to Tektronix instruments are sometimes made to accommodate improved components as they become available, and to give you the benefit of the latest circuit improvements developed in our engineering department. It is therefore important, when ordering parts, to include the following information in your order: Part number, instrument type or number, serial number, and modification number if applicable.

If a part you have ordered has been replaced with a new or improved part, your local Tektronix, Inc. Field Office or representative will contact you concerning any change in part number.

Change information, if any, is located at the rear of this manual.

SPECIAL NOTES AND SYMBOLS

X000	Part first added at this serial number
00X	Part removed after this serial number

FIGURE AND INDEX NUMBERS

Items in this section are referenced by figure and index numbers to the illustrations.

INDENTATION SYSTEM

This mechanical parts list is indented to indicate item relationships. Following is an example of the indentation system used in the description column.

1 2 3 4 5 Name & Description

Assembly and/or Component
Attaching parts for Assembly and/or Component
- - - * - - -
Detail Part of Assembly and/or Component
Attaching parts for Detail Part
- - - * - - -
Parts of Detail Part
Attaching parts for Parts of Detail Part
- - - * - - -

Attaching Parts always appear in the same indentation as the item it mounts, while the detail parts are indented to the right. Indented items are part of, and included with, the next higher indentation. The separation symbol - - - * - - - indicates the end of attaching parts.

Attaching parts must be purchased separately, unless otherwise specified.

ITEM NAME

In the Parts List, an Item Name is separated from the description by a colon (:). Because of space limitations, an Item Name may sometimes appear as incomplete. For further Item Name identification, the U.S. Federal Cataloging Handbook H6-1 can be utilized where possible.

ABBREVIATIONS

"	INCH
#	NUMBER SIZE
ACTR	ACTUATOR
ADPTR	ADAPTER
ALIGN	ALIGNMENT
AL	ALUMINUM
ASSEM	ASSEMBLED
ASSY	ASSEMBLY
ATTEN	ATTENUATOR
AWG	AMERICAN WIRE GAGE
BD	BOARD
BRKT	BRACKET
BRS	BRASS
BRZ	BRONZE
BSHG	BUSHING
CAB	CABINET
CAP	CAPACITOR
CER	CERAMIC
CHAS	CHASSIS
CKT	CIRCUIT
COMP	COMPOSITION
CONN	CONNECTOR
COV	COVER
CPLG	COUPLING
CRT	CATHODE RAY TUBE
DEG	DEGREE
DWR	DRAWER
ELCTRN	ELECTRON
ELEC	ELECTRICAL
ELCTLT	ELECTROLYTIC
ELEM	ELEMENT
EPL	ELECTRICAL PARTS LIST
EQPT	EQUIPMENT
EXT	EXTERNAL
FIL	FILLISTER HEAD
FLEX	FLEXIBLE
FLH	FLAT HEAD
FLTR	FILTER
FR	FRAME or FRONT
FSTNR	FASTENER
FT	FOOT
FXD	FIXED
GSKT	GASKET
HDL	HANDLE
HEX	HEXAGON
HEX HD	HEXAGONAL HEAD
HEX SOC	HEXAGONAL SOCKET
HLCPS	HELICAL COMPRESSION
HLEXT	HELICAL EXTENSION
HV	HIGH VOLTAGE
IC	INTEGRATED CIRCUIT
ID	INSIDE DIAMETER
IDENT	IDENTIFICATION
IMPLR	IMPELLER
IN	INCH
INCAND	INCANDESCENT
INSUL	INSULATOR
INTL	INTERNAL
LPHLDR	LAMPHOLDER
MACH	MACHINE
MECH	MECHANICAL
MTG	MOUNTING
NIP	NIPPLE
NON WIRE	NOT WIRE WOUND
OBD	ORDER BY DESCRIPTION
OD	OUTSIDE DIAMETER
OVH	OVAL HEAD
PH BRZ	PHOSPHOR BRONZE
PL	PLAIN or PLATE
PLSTC	PLASTIC
PN	PART NUMBER
PNH	PAN HEAD
PWR	POWER
RCPT	RECEPTACLE
RES	RESISTOR
RGD	RIGID
RLF	RELIEF
RTNR	RETAINER
SCH	SOCKET HEAD
SCOPE	OSCILLOSCOPE
SCR	SCREW
SE	SINGLE END
SECT	SECTION
SEMICOND	SEMICONDUCTOR
SHLD	SHIELD
SHLDR	SHOULDERED
SKT	SOCKET
SL	SLIDE
SLFLKG	SELF-LOCKING
SLVG	SLEEVING
SPR	SPRING
SQ	SQUARE
SST	STAINLESS STEEL
STL	STEEL
SW	SWITCH
T	TUBE
TERM	TERMINAL
THD	THREAD
THK	THICK
TNSN	TENSION
TPG	TAPPING
TRH	TRUSS HEAD
V	VOLTAGE
VAR	VARIABLE
W/	WITH
WSHR	WASHER
XFMR	TRANSFORMER
XSTR	TRANSISTOR

CROSS INDEX - MFR. CODE NUMBER TO MANUFACTURER

Mfr. Code	Manufacturer	Address	City, State, Zip Code
01536	TEXTRON INC CAMCAR DIV SEMS PRODUCTS UNIT	1818 CHRISTINA ST	ROCKFORD IL 61108
05574	VIKING CONNECTORS INC SUB OF CRITON CORP	21001 NORDHOFF ST	CHATSWORTH CA 91311-5911
08261	SPECTRA-STRIP AN ELTRA CO	7100 LAMPSON AVE	GARDEN GROVE CA 92642
09772	WEST COAST LOCKWASHER CO INC	16730 E JOHNSON DRIVE P O BOX 3588	CITY OF INDUSTRY CA 91744
09922	BURNDY CORP	RICHARDS AVE	NORWALK CT 06852
12327	FREEWAY CORP	9301 ALLEN DR	CLEVELAND OH 44125-4632
13556	TRW SYLINDRICAL CONNECTOR DIV OF TRW INC	8821 SCIENCE CENTER DRIVE	MINNEAPOLIS MN 55428-3619
22526	DU PONT E I DE NEMOURS AND CO INC DU PONT CONNECTOR SYSTEMS DIV MILITARY PRODUCTS GROUP	515 FISHING CREEK RD	NEW CUMBERLAND PA 17070-3007
22599	AMERACE CORP ESNA DIV	15201 BURBANK BLVD SUITE C	VAN NUYS CA 91411-3532
22670	G M NAMEPLATE INC	2040 15TH AVE WEST	SEATTLE WA 98119-2728
23880	STANFORD APPLIED ENGINEERING INC	340 MARTIN AVE	SANTA CLARA CA 95050-3112
24546	CORNING GLASS WORKS	550 HIGH ST	BRADFORD PA 16701-3737
24931	SPECIALTY CONNECTOR CO INC	2100 EARLYWOOD DR PO BOX 547	FRANKLIN IN 46131
26805	M/A-COM OMNI SPECTRA INC MICROWAVE CONNECTOR DIV SUB OF M/A-COM INC	140 4TH AVE	WALTHAM MA 02154-7507
71785	TRW INC TRW CINCH CONNECTORS DIV	1501 MORSE AVE	ELK GROVE VILLAGE IL 60007-5723
73743	FISCHER SPECIAL MFG CO	111 INDUSTRIAL RD	COLD SPRING KY 41076-9749
74445	HOLO-KROME CO	31 BROOK ST	ELMWOOD CT 06110-2350
76854	OAK SWITCH SYSTEMS INC SUB OF OAK TECHNOLOGY INC	100 S MAIN ST PO BOX 517	CRYSTAL LAKE IL 60014-6201
77900	SHAKEPROOF DIV OF ILLINOIS TOOL WORKS	SAINT CHARLES RD	ELGIN IL 60120
78189	ILLINOIS TOOL WORKS INC SHAKEPROOF DIV	ST CHARLES ROAD	ELGIN IL 60120
79136	WALDES KOHINOR IN	47-16 AUSTEL PLACE	LONG ISLAND CITY NY 11101-4402
80009	TEKTRONIX INC	14150 SW KARL BRAUN DR PO BOX 500 MS 53-111	BEAVERTON OR 97707-0001
83385	MICRODOT MFG INC GREER-CENTRAL DIV	3221 W BIG BEAVER RD	TROY MI 48098
83486	ELCO INDUSTRIES INC	1101 SAMUELSON RD	ROCKFORD IL 61101
86928	SEASTROM MFG CO INC	701 SONORA AVE	GLENDALE CA 91201-2431
87308	FARLEY METALS INC SOUTHERN SCREW DIV	BARKLEY RD P O BOX 1360	STATESVILLE NC 28677-9774
90484	SURPRENANT WIRE AND CABLE DIV OF FL INDUSTRIES INC	172 STERLING ST	CLINTON MA 01510
91260	CONNOR SPRING AND MFG CO	1729 JUNCTION AVE	SAN JOSE CA 95112
93907	TEXTRON INC CAMCAR DIV	600 18TH AVE	ROCKFORD IL 61101
98291	SEALECTRO CORP BICC ELECTRONICS	40 LINDEMAN DR	TURNBULL CT 06611-4739
TK0392	NORTHWEST FASTENER SALES INC	7923 SW CIRRUS DRIVE	BEAVERTON OR 97005-6448
TK0433	PORTLAND SCREW CO	6520 N BASIN	PORTLAND OR 97217-3920
TK0435	LEWIS SCREW CO	4300 S RACINE AVE	CHICAGO IL 60609-3320
TK1326	NORTHWEST FOURSLIDE INC	18224 SW 100TH CT	TUALATIN OR 97062
TK2165	TRI-QUEST CORP	3000 LEWIS AND CLARK HWY	VANCOUVER WA 98661-2999

Fig. & Index No.	Tektronix Part No.	Serial/Assembly No. Effective	Dscont	Qty	12345 Name & Description	Mfr. Code	Mfr. Part No.
1-1	366-1064-00	B020000	B152384	1	KNOB:GY,0.096 ID X 0.392 OD X 0.466	80009	366-1064-00
	366-1084-00	B152385		1	KNOB:GY,0.08 ID X 0.392 OD X 0.4 H	80009	366-1084-00
	213-0153-00			1	.SETSCREW:5-40 X 0.125,STL	TK0392	ORDER BY DESCR
-2	366-1148-01	B020000	B152384	1	KNOB:GY,0.16 ID X 0.706 OD X 0.6 H	80009	366-1148-01
	366-1101-00	B152385		1	KNOB:GY,0.127 ID X 0.706 OD X 0.6 H	80009	366-1101-00
	213-0153-00			2	.SETSCREW:5-40 X 0.125,STL	TK0392	ORDER BY DESCR
-3	366-1168-00			2	KNOB:RED,0.084 ID X 0.392 OD X 0.4 H	80009	366-1168-00
	213-0153-00			1	.SETSCREW:5-40 X 0.125,STL	TK0392	ORDER BY DESCR
-4	366-1057-00			1	KNOB:GY,0.252 ID X 0.796 OD X 0.79 H	80009	366-1057-00
	213-0153-00			2	.SETSCREW:5-40 X 0.125,STL	TK0392	ORDER BY DESCR
-5	366-0402-00			1	KNOB:GY,0.126 ID X 0.825 OD X 0.67 H	80009	366-0402-00
	213-0153-00			2	.SETSCREW:5-40 X 0.125,STL	TK0392	ORDER BY DESCR
-6	366-1258-00			1	KNOB:GY,0.252 ID X 0.706 OD X 0.74 H	80009	366-1258-00
	213-0153-00			2	.SETSCREW:5-40 X 0.125,STL	TK0392	ORDER BY DESCR
-7	200-1011-03			1	CAP,KNOB:DIAL WINDOW	80009	200-1011-03
	366-1284-00			1	KNOB:CHARCOAL,0.252 ID X 1.456 OD X 0.38 H	80009	366-1284-00
-8	331-0277-00			1	.DIAL,SCALE:MKD 2 PS-1 MS	80009	331-0277-00
-9	366-1150-00			1	KNOB:CHARCOAL,0.252 ID X 1.452 OD X 0.38 H	80009	366-1150-00
	213-0153-00			2	.SETSCREW:5-40 X 0.125,STL	TK0392	ORDER BY DESCR
-10	366-1059-01			1	PUSH BUTTON:GY W/YEL BND,0.227 OD X 0.3	80009	366-1059-01
-11	366-1215-00	B020000	B142339	1	KNOB:GY,0.127 ID X 0.5 OD 0.531 H	80009	366-1215-00
	366-1215-03	B142340		1	KNOB:GY,0.127 ID X 0.5 OD X 0.531 H	TK2165	ORDER BY DESCR
	213-0153-00			1	.SETSCREW:5-40 X 0.125,STL	TK0392	ORDER BY DESCR
-12	366-1173-00	B020000	B039999	1	KNOB:GY,0.096 ID X 0.28 OD X 0.32 L	80009	366-1173-00
	366-1173-04	B040000		1	KNOB:GY,0.096 ID X 0.28 OD X 0.33 H	80009	366-1173-04
	213-0140-00			1	.SETSCREW:2-56 X 0.094,STL	TK0433	ORDER BY DESCR
-13	366-1058-19			1	KNOB:GRAY,7S12	80009	366-1058-19
					(ATTACHING PARTS)		
-14	214-1095-00			1	PIN,SPRING:0.187 L X 0.094 OD,STL,CD PL	22599	52-022-094-0187
-15	358-0414-00			1	BUSHING,SLEEVE:0.125 ID X 0.312 OD X 0.21 L	80009	358-0414-00
-16	105-0076-02	B010100	B142269	1	RELEASE BAR,LCH:PLUG-IN UNIT	80009	105-0076-02
	105-0076-04	B142270		1	RELEASE BAR,LCH:PLUG-IN UNIT	80009	105-0076-04
-17	214-1280-00			1	SPRING,HLCPS:0.14 OD X 1.126 L,TWIST LOOP	91260	ORDER BY DESCR
-18	214-1054-00			1	SPRING,FLAT:0.825 X 0.322,SST	TK1326	ORDER BY DESCR
-19	105-0075-00			1	BOLT,LATCH:	80009	105-0075-00
					(END ATTACHING PARTS)		
-20	358-0378-00			5	BUSHING,SLEEVE:0.131 ID X 0.18 OD X 0.125 L	80009	358-0378-00
-21	333-1378-00			1	PANEL,FRONT:	80009	333-1378-00
-22	348-0235-00			2	SHLD GSKT,ELEK:FINGER TYPE,4.734 L	80009	348-0235-00
-23	----- -----			1	SWITCH,PUSH:(SEE S625 REPL)		
-24	386-1858-01			1	SUBPANEL,FRONT:	80009	386-1858-01
					(ATTACHING PARTS)		
-25	213-0192-00	B020000	B141929	8	SCREW,TPG,TF:6-32 X 0.5,SPCL TYPE,FILH,STL	87308	ORDER BY DESCR
	213-0793-00	B141930		8	SCREW,TPG,TF:6-32 X 0.4375,TAPTITE,FILH	83486	239-006-406043
					(END ATTACHING PARTS)		
-26	200-0895-00			1	COVER,PWR SPLY:FRONT	80009	200-0895-00
					(ATTACHING PARTS)		
-27	210-0586-00			4	NUT,PL,ASSEM WA:4-40 X 0.25,STL CD PL	78189	211-041800-00
-28	343-0153-00			4	CLAMP,RIM CLENC:0.375 X 0.358,BRS	80009	343-0153-00
					(END ATTACHING PARTS)		
-29	200-0895-00			1	COVER,PWR SPLY:FRONT	80009	200-0895-00
					(ATTACHING PARTS)		
-30	210-0586-00			2	NUT,PL,ASSEM WA:4-40 X 0.25,STL CD PL	78189	211-041800-00
-31	343-0153-00			2	CLAMP,RIM CLENC:0.375 X 0.358,BRS	80009	343-0153-00
					(END ATTACHING PARTS)		
-32	----- -----			2	RESISTOR,VAR:(SEE R660,R665 REPL)		
					(ATTACHING PARTS)		
-33	358-0409-00			2	BSHG,MACH THD:0.25-32 X 0.159 ID,BRS	80009	358-0409-00
-34	220-0510-00			2	NUT,PLAIN,HEX:0.25 X 0.312 HEX,AL	80009	220-0510-00
-35	210-0046-00			4	WASHER,LOCK:0.261 ID,INTL,0.018 THK,STL	77900	1214-05-00-0541C
					(END ATTACHING PARTS)		
-36	343-0293-00			1	RTNR,TRIM STRIP:ALUMINUM	80009	343-0293-00
-37	131-0779-00			4	JACK,TIP:U/W 0.08 OD TEST POINT	98291	0168010000208
					(ATTACHING PARTS)		
-38	352-0216-00			2	HOLDER,TIP JACK:(2)JACKS,BLACK DELRIN	80009	352-0216-00
-39	213-0078-00			2	SCREW,TPG,TC:4-24 X 0.375,FLH 82 DEG,STL	83385	ORDER BY DESCR
					(END ATTACHING PARTS)		
-40	----- -----			1	CKT BOARD ASSY:SCAN MODE SW(SEE A9 REPL)		

Fig. & Index No.	Tektronix Part No.	Serial/Assembly No. Effective	Dscont	Qty	12345 Name & Description	Mfr. Code	Mfr. Part No.
1-					(ATTACHING PARTS)		
-41	211-0156-00			2	SCREW,MACHINE:1-72 X 0.250,FLH,82 DEG,STL	93907	ORDER BY DESCR
					(END ATTACHING PARTS)		
-42	----- -----			1	RESISTOR,VAR:(SEE R601 REPL)		
					(ATTACHING PARTS)		
-43	210-0583-00			1	NUT,PLAIN,HEX:0.25-32 X 0.312,BRS CD PL	73743	2X-20319-402
	210-0940-00			1	WASHER,FLAT:0.25 ID X 0.375 OD X 0.02,STL	12327	ORDER BY DESCR
-44	210-0046-00			1	WASHER,LOCK:0.261 ID,INTL,0.018 THK,STL	77900	1214-05-00-0541C
					(END ATTACHING PARTS)		
	331-0275-00			1	DIAL ASSY,TAPE:	80009	331-0275-00
-45	354-0163-00			2	.RING,RETAINING:TYPE E EXT,U/O 0.125 ID SFT	79136	5133-12ZD
-46	210-0803-00			2	.WASHER,FLAT:0.15 ID X 0.375 OD X 0.032,STL	12327	ORDER BY DESCR
-47	386-1299-00			1	.PL,RTNG,DIAL TA:PH BRZ	80009	386-1299-00
-48	331-0273-00			1	.DIAL,SCALE:	80009	331-0273-00
-49	401-0042-00			2	.BEARING,SLEEVE:0.255 ID X 0.5 OD X 0.79 L	80009	401-0042-00
-50	129-0288-00			2	.POST,DIAL TAPE:	80009	129-0288-00
-51	210-1043-00	B020000	B131169	2	.WASHER,FLAT:0.254 ID X 0.685 OD X 0.01	80009	210-1043-00
	210-1043-01	B131170	B153519	2	.WASHER,FLAT:0.254 ID X 0.685 OD X 0,02	80009	210-1043-01
	210-1410-00	B153520		2	.WASHER,FLAT:0.254 ID X 0.622 OD X 0.01,NYL	86928	5610-71-10
					(STANDARD ONLY)		
	210-1043-00	B020000	B131169	2	.WASHER,FLAT:0.254 ID X 0.685 OD X 0.01	80009	210-1043-00
	210-1043-01	B131170	B154294	2	.WASHER,FLAT:0.254 ID X 0.685 OD X 0,02	80009	210-1043-01
	210-1014-00	B154295		2	.WASHER,FLAT:0.094 ID X 0.312 OD X 0.02	80009	210-1014-00
					(OPTION 03 ONLY)		
-52	331-0189-00			1	.LENS,TAPE DIAL:1.52 X 0.53,ACRYLIC	80009	331-0189-00
					.(ATTACHING PARTS)		
-53	211-0105-00			2	.SCREW,MACHINE:4-40 X 0.188,FLH,100 DEG	TK0435	ORDER BY DESCR
					.(END ATTACHING PARTS)		
-54	407-0861-00			1	.BRACKET,ANGLE:DIAL TAPE ASSY,BRS CU-SN-ZN	80009	407-0861-00
-55	----- -----			1	.RESISTOR,VAR:(SEE R674 REPL)		
					.(ATTACHING PARTS)		
-56	210-0413-00			1	.NUT,PLAIN,HEX:0.375-32 X 0.5,BRS CD PL	73743	3145-402
-57	210-0012-00			1	.WASHER,LOCK:0.384 ID,INTL,0.022 THK,STL	09772	ORDER BY DESCR
					.(END ATTACHING PARTS)		
-58	407-0843-00			1	.BRACKET,CMPNT:READOUT MECH,ALUMINUM	80009	407-0843-00
-59	214-1634-00			1	.SPRING,FLAT:1.005 X 0.15 CU BE	80009	214-1634-00
					.(ATTACHING PARTS)		
-60	211-0503-00			1	.SCREW,MACHINE:6-32 X 0.188,PNH,STL	TK0435	ORDER BY DESCR
					.(END ATTACHING PARTS)		
-61	214-0953-00			1	.GEAR,SPUR:26 TOOTH,SST	80009	214-0953-00
	213-0075-00			4	..SETSCREW:4-40 X 0.094,STL	74445	ORDER BY DESCR
-62	384-1040-00			1	.EXTENSION SHAFT:1.335 L X 0.25 OD SST,SHLDR	80009	384-1040-00
-63	401-0105-00			1	.GEAR,SPUR:PLATED	80009	401-0105-00
	213-0075-00			1	..SETSCREW:4-40 X 0.094,STL	74445	ORDER BY DESCR
-64	384-1039-00			1	.EXTENSION SHAFT:1.54 L X 0.186 OD SST,SHLDR	80009	384-1039-00
-65	166-0024-00			1	.SPACER,SLEEVE:0.125 L X 0.125 ID,BRASS	76854	3-5116-314
-66	401-0106-00			1	.GEAR,SPUR:PLATED	80009	401-0106-00
	213-0075-00			1	..SETSCREW:4-40 X 0.094,STL	74445	ORDER BY DESCR
-67	210-0917-00			1	.WASHER,FLAT:0.191 ID X 0.625 OD X 0.025	86928	ORDER BY DESCR
					.(ATTACHING PARTS FOR DIAL ASSY)		
-68	211-0538-00			2	SCREW,MACHINE:6-32 X 0.312,FLH,100 DEG,STL	93907	ORDER BY DESCR
					(END ATTACHING PARTS)		
-69	----- -----			1	CKT BOARD ASSY:RHO CAL SWITCH(SEE A7 REPL)		
					(ATTACHING PARTS)		
-70	211-0156-00			1	SCREW,MACHINE:1-72 X 0.250,FLH,82 DEG,STL	93907	ORDER BY DESCR
					(END ATTACHING PARTS)		
-71	----- -----			1	CKT BOARD ASSY:HI RES/PRESET SW		
					(SEE A8 REPL)		
					(ATTACHING PARTS)		
-72	211-0116-00			2	SCR,ASSEM WSHR:4-40 X 0.312,PNH,BRS,NP,POZ	77900	ORDER BY DESCR
					(END ATTACHING PARTS)		
-73	----- -----			1	RESISTOR,VAR:(SEE R151 REPL)		
					(ATTACHING PARTS)		
-74	210-0465-00			2	NUT,PLAIN,HEX:0.25-32 X 0.375,BRS CD PL	73743	3095-402
-75	210-0583-00			1	NUT,PLAIN,HEX:0.25-32 X 0.312,BRS CD PL	73743	2X-20319-402
-76	210-0940-00			1	WASHER,FLAT:0.25 ID X 0.375 OD X 0.02,STL	12327	ORDER BY DESCR
-77	210-0046-00			2	WASHER,LOCK:0.261 ID,INTL,0.018 THK,STL	77900	1214-05-00-0541C
					(END ATTACHING PARTS)		

Fig. & Index No.	Tektronix Part No.	Serial/Assembly No. Effective	Dscont	Qty	12345 Name & Description	Mfr. Code	Mfr. Part No.
1-78	----- -----			1	RESISTOR,VAR:(SEE R345 REPL)		
-79	----- -----			2	RESISTOR,VAR:(SEE R305,R670 REPL)		
					(ATTACHING PARTS)		
-80	358-0409-00			2	BSHG,MACH THD:0.25-32 X 0.159 ID,BRS	80009	358-0409-00
-81	129-0252-00			2	SPCR,POST:0.471 L,0.25-32 THRU,AL,0.312 HEX	80009	129-0252-00
-82	210-0583-00			2	NUT,PLAIN,HEX:0.25-32 X 0.312,BRS CD PL	73743	2X-20319-402
					(END ATTACHING PARTS)		
-83	361-0366-00			1	SPACER,SWITCH:0.09 X 1.075 X 1.1,AL	80009	361-0366-00
-84	----- -----			1	RESISTOR,VAR:(SEE R675 REPL)		
					(ATTACHING PARTS)		
-85	358-0422-00			1	BSHG,MACH THD:0.25-32 X 0.159 ID,BRS	80009	358-0422-00
-86	129-0252-00			1	SPCR,POST:0.471 L,0.25-32 THRU,AL,0.312 HEX	80009	129-0252-00
	210-0583-00			1	NUT,PLAIN,HEX:0.25-32 X 0.312,BRS CD PL	73743	2X-20319-402
					(END ATTACHING PARTS)		
-87	337-1238-00	B020000	B029999	1	SHIELD,ELEC:LEFT SIDE	80009	337-1238-00
	337-1238-01	B030000		1	SHIELD,ELEC:LEFT SIDE	80009	337-1238-01
-88	337-1064-00	B020000	B029999	1	SHIELD,ELEC:SIDE,PLUG-IN UNITS	80009	337-1064-00
	337-1064-04	B030000	B152729	1	SHIELD,ELEC:SIDE FOR PLUG-IN UNIT	80009	337-1064-04
	337-1064-12	B152730		1	SHIELD,ELEC:SIDE FOR PLUG-IN UNIT	80009	337-1064-12
-89	426-0680-00			1	FR SECT,PLUG-IN:LOWER RIGHT	80009	426-0680-00
-90	386-1856-00			2	SPRT,CKT BD CON:	80009	386-1856-00
					(ATTACHING PARTS)		
-91	213-0192-00	B020000	B141929	4	SCREW,TPG,TF:6-32 X 0.5,SPCL TYPE,FILH,STL	87308	ORDER BY DESCR
	213-0793-00	B141930		4	SCREW,TPG,TF:6-32 X 0.4375,TAPTITE,FILH	83486	239-006-406043
					(END ATTACHING PARTS)		
-92	426-0689-00			1	FR SECT,PLUG-IN:LOWER LEFT	80009	426-0689-00
-93	388-1473-00			1	CIRCUIT BOARD:COMMUTATOR SW FIXED	80009	388-1473-00
					(ATTACHING PARTS)		
-94	211-0112-00			3	SCREW,MACHINE:2-56 X 0.375,FLH,100 DEG,STL	TK0435	ORDER BY DESCR
-95	210-0001-00			3	WASHER,LOCK:#2 INTL,0.013 THK,STL	77900	1202-00-00-0541C
-96	210-0405-00			3	NUT,PLAIN,HEX:2-56 X 0.188,BRS CD PL	73743	12157-50
					(END ATTACHING PARTS)		
-97	204-0410-00			1	BODY HALF,CONN:STATIONARY	80009	204-0410-00
					(ATTACHING PARTS)		
-98	211-0038-00			3	SCREW,MACHINE:4-40 X 0.312,FLH,100 DEG,STL	TK0435	ORDER BY DESCR
-99	210-0586-00			3	NUT,PL,ASSEM WA:4-40 X 0.25,STL CD PL	78189	211-041800-00
					(END ATTACHING PARTS)		
-100	----- -----			1	CKT BOARD ASSY:CABLE(SEE A5 REPL)		
-101	131-0608-00			58	.TERMINAL,PIN:0.365 L X 0.025 BRZ GLD PL	22526	48283-036
	131-0589-00			6	.TERMINAL,PIN:0.46 L X 0.025 SQ PH BRZ	22526	48283-029
-102	131-0990-00	B020000	B142108	4	.CONN,RCPT,ELEC:CKT BD,36/72 CONT	05574	000201-5433
	131-0990-02	B142109		4	.CONN,RCPT,ELEC:CKT BD,2X36,0.156 SPACING	05574	000201-5550
-103	214-0702-00			1	.KEY,CONN PLZN:CKT BD CONN,T SHAPED	80009	214-0702-00
					.(ATTACHING PARTS FOR CKT BD)		
-104	211-0008-00			4	SCREW,MACHINE:4-40 X 0.25,PNH,STL	93907	ORDER BY DESCR
					(END ATTACHING PARTS)		
-105	426-0678-00			1	FR SECT,PLUG-IN:UPPER RIGHT	80009	426-0678-00
-106	220-0547-01			4	NUT BLOCK:4-40 X 0.282,NI SIL NP	80009	220-0547-01
					(ATTACHING PARTS)		
-107	211-0105-00			4	SCREW,MACHINE:4-40 X 0.188,FLH,100 DEG	TK0435	ORDER BY DESCR
					(END ATTACHING PARTS)		
-108	426-0679-00			1	FR SECT,PLUG-IN:UPPER LEFT	80009	426-0679-00
-109	214-1061-00			1	CONTACT,ELEC:GROUNDING,CU BE	80009	214-1061-00
	376-0039-00	B010100	B153239	1	CPLG,SHAFT,RGD:0.082 & 0.128 ID,AL	80009	376-0039-00
	376-0050-00	B153240		1	CPLG,SHAFT,FLEX:0.081 & 0.127 ID,PP	80009	376-0050-00
-110	----- -----			1	SWITCH,ROTARY:(SEE S146 REPL)		
-111	386-1951-00			1	.SUPPORT,SWITCH:	80009	386-1951-00
	210-0905-00	B153240		1	.WASHER,FLAT:0.256 ID X 0.438 OD X 0.05,BRS	83385	ORDER BY DESCR
-112	----- -----			1	.RESISTOR,VAR:(SEE R320 REPL)		
					.(ATTACHING PARTS)		
-113	210-0583-00			1	.NUT,PLAIN,HEX:0.25-32 X 0.312,BRS CD PL	73743	2X-20319-402
-114	210-0046-00			1	.WASHER,LOCK:0.261 ID,INTL,0.018 THK,STL	77900	1214-05-00-0541C
					.(END ATTACHING PARTS)		
-115	214-1205-00			1	.ADAPTER,SW ACTR:VARIABLE(CAL IN)	80009	214-1205-00
-116	131-0621-00			11	.CONN,TERM:22-26 AWG,BRS,CU BE GLD PL	22526	46231-000
	131-0622-00			3	.CONTACT,ELEC:28-32 AWG,BRS & CU BE GLD PL	22526	46241-000
-117	131-0707-00			7	.CONTACT,ELEC:22-26 AWG,BRS,CU BE GLD PL	22526	47439-000
	131-0792-00			3	.CONNECTOR,TERM:18-20 AWG,CU BE GOLD PL	22526	46221

Fig. & Index No.	Tektronix Part No.	Serial/Assembly No. Effective	Dscont	Qty	12345 Name & Description	Mfr. Code	Mfr. Part No.
1-118	352-0165-01			1	.HLDR,TERM CONN:7 WIRE,BROWN	80009	352-0165-01
-119	352-0198-03			1	.HLDR,TERM CONN:2 WIRE,ORANGE	80009	352-0198-03
	352-0198-07			1	.HLDR,TERM CONN:2 WIRE,VIOLET	80009	352-0198-07
-120	352-0200-05			1	.HLDR,TERM CONN:4 WIRE,GREEN	80009	352-0200-05
-121	352-0205-02			1	.HLDR,TERM CONN:9 WIRE,RED	80009	352-0205-02
					.(ATTACHING PARTS FOR S146)		
-122	210-0413-00			1	NUT,PLAIN,HEX:0.375-32 X 0.5,BRS CD PL	73743	3145-402
-123	210-0012-00			1	WASHER,LOCK:0.384 ID,INTL,0.022 THK,STL	09772	ORDER BY DESCR
					(END ATTACHING PARTS)		
-124	376-0007-00			2	CPLG,SHAFT,RGD:0.252 ID X 0.5 OD,AL	80009	376-0007-00
	213-0005-00			4	.SETSCREW:8-32 X 0.125,STL	TK0392	ORDER BY DESCR
-125	358-0029-00			2	BSHG,MACH THD:0.375-32 X 0.5 HEX,BRS NP	80009	358-0029-00
					(ATTACHING PARTS)		
-126	210-0413-00			2	NUT,PLAIN,HEX:0.375-32 X 0.5,BRS CD PL	73743	3145-402
-127	210-0012-00			2	WASHER,LOCK:0.384 ID,INTL,0.022 THK,STL	09772	ORDER BY DESCR
					(END ATTACHING PARTS)		
-128	131-0581-00			2	CONN,RCPT,ELEC:EDGECARD,6/12 CONT,0.156 SP	23880	MMM6D/1-2TX
-129	351-0132-00			2	GUIDE-CLIP:SAMPLING HEAD,ACETAL	80009	351-0132-00
					(ATTACHING PARTS)		
-130	213-0082-00			4	SCREW,TPG,TC:4-40 X 0.5,TYPE T,PNH,STL	TK0435	7933-302
					(END ATTACHING PARTS)		
-131	407-0842-00			1	BRACKET,CONN:ALUMINUM	80009	407-0842-00
					(ATTACHING PARTS)		
-132	211-0038-00			2	SCREW,MACHINE:4-40 X 0.312,FLH,100 DEG,STL	TK0435	ORDER BY DESCR
-133	211-0101-00			2	SCREW,MACHINE:4-40 X 0.25,FLH,100 DEG,STL	TK0435	ORDER BY DESCR
-134	210-0586-00			4	NUT,PL,ASSEM WA:4-40 X 0.25,STL CD PL	78189	211-041800-00
					(END ATTACHING PARTS)		
-135	----- -----			1	CKT BOARD ASSY:LEFT INTERFACE(SEE A1 REPL)		
-136	131-0589-00	B010100	B153239	17	.TERMINAL,PIN:0.46 L X 0.025 SQ PH BRZ	22526	48283-029
	131-0608-00	B010100	B153239	7	.TERMINAL,PIN:0.365 L X 0.025 BRZ GLD PL	22526	48283-036
	131-0993-00	B153240		1	.BUS,CONDUCTOR:SHUNT ASSEMBLY,BLACK	22526	65474-005
-137	136-0183-00			1	.SKT,PL-IN ELEK:TRANSISTOR,3 CONTACT	80009	136-0183-00
-138	136-0220-00			12	.SKT,PL-IN ELEK:TRANSISTOR 3 CONTACT	71785	133-23-11-034
-139	136-0235-00			1	.SKT,PL-IN ELEK:TRANSISTOR,6 CONTACT	71785	133-96-12-062
-140	131-0566-00			1	.BUS,CONDUCTOR:DUMMY RES,0.094 OD X 0.225 L	24546	OMA 07
-141	214-0579-00	B010100	B153239	4	.TERM,TEST POINT:BRS CD PL	80009	214-0579-00
	136-0252-07	B100000	B153239	51	.SOCKET,PIN CONN:W/O DIMPLE	22526	75060-012
					.(ATTACHING PARTS FOR CKT BD)		
-142	211-0116-00			3	SCR,ASSEM WSHR:4-40 X 0.312,PNH,BRS,NP,POZ	77900	ORDER BY DESCR
					(END ATTACHING PARTS)		
-143	----- -----			1	CKT BOARD ASSY:RIGHT INTERFACE(SEE A3 REPL)		
-144	214-0579-00	B020000	B089999	5	.TERM,TEST POINT:BRS CD PL	80009	214-0579-00
	214-0579-00	B090000		3	.TERM,TEST POINT:BRS CD PL	80009	214-0579-00
-145	131-0604-00			38	.CONTACT,ELEC:CKT BD SW,SPR,CU BE	80009	131-0604-00
-146	131-0608-00			19	.TERMINAL,PIN:0.365 L X 0.025 BRZ GLD PL	22526	48283-036
-147	131-0391-00			1	.CONN,RCPT,ELEC:SNAP-ON,MALE	24931	32JR105-1
-148	136-0220-00			22	.SKT,PL-IN ELEK:TRANSISTOR 3 CONTACT	71785	133-23-11-034
	136-0252-07	B020000	B099999	12	.SOCKET,PIN CONN:W/O DIMPLE	22526	75060-012
	136-0235-00	B100000		2	.SKT,PL-IN ELEK:TRANSISTOR,6 CONTACT	71785	133-96-12-062
	200-0687-01	B100000		2	.COVER,XSTR:TO-5,ACETAL	80009	200-0687-01
	105-0265-00			1	.ACTR ASSY,CAM S:RIGHT INTERFACE	80009	105-0265-00
-149	200-1157-00			1	..COVER,CAM SW:17 & 21 ELEMENTS	80009	200-1157-00
					..(ATTACHING PARTS)		
-150	211-0678-00			6	..SCR,ASSEM WSHR:4-40 X 0.281,PNH,STL,POZ	01536	ORDER BY DESCR
-151	210-0201-00			3	..TERMINAL,LUG:0.12 ID,LOCKING,BRZ TIN PL	86928	A373-157-2
-152	210-0004-00			3	..WASHER,LOCK:#4 INTL,0.015 THK,STL	77900	1204-00-00-0541C
-153	210-0406-00			6	..NUT,PLAIN,HEX:4-40 X 0.188,BRS CD PL	73743	12161-50
					..(END ATTACHING PARTS)		
-154	401-0081-01			2	..BEARING,CAM SW:W/THREADED BUSHING	80009	401-0081-01
					..(ATTACHING PARTS)		
-155	210-0406-00			4	..NUT,PLAIN,HEX:4-40 X 0.188,BRS CD PL	73743	12161-50
					..(END ATTACHING PARTS)		
-156	214-1139-02			1	SPRING,FLAT:0.885 X 0.156 CU BE GRN CLR	80009	214-1139-02
	214-1139-03			1	..SPRING,FLAT:0.885 X 0.156 CU BE RED CLR	80009	214-1139-03
-157	214-1127-00			4	..ROLLER,DETENT:0.125 DIA X 0.125,SST	80009	214-1127-00
-158	401-0104-01			1	..BEARING,CAM SW:W/BUSHING	80009	401-0104-01
					..(ATTACHING PARTS)		
	210-0406-00			2	..NUT,PLAIN,HEX:4-40 X 0.188,BRS CD PL	73743	12161-50

Fig. & Index No.	Tektronix Part No.	Serial/Assembly No. Effective	Dscont	Qty	12345 Name & Description	Mfr. Code	Mfr. Part No.
1-					..(END ATTACHING PARTS)		
-159	105-0205-00			1	..ACTUATOR,CAM SW:TIMING,FRONT	80009	105-0205-00
-160	105-0207-00			1	..ACTUATOR,CAM SW:TIMING,REAR	80009	105-0207-00
-161	----- -----			1	..RESISTOR,VAR:(SEE R710 REPL)		
					..(ATTACHING PARTS)		
-162	210-0583-00			1	..NUT,PLAIN,HEX:0.25-32 X 0.312,BRS CD PL	73743	2X-20319-402
	210-0046-00			1	..WASHER,LOCK:0.261 ID,INTL,0.018 THK,STL	77900	1214-05-00-0541C
	210-0905-00			1	..WASHER,FLAT:0.256 ID X 0.438 OD X 0.05,BRS	83385	ORDER BY DESCR
					..(END ATTACHING PARTS)		
-163	386-1792-00			1	..PL,VAR RES MTG:STEEL CD PL	80009	386-1792-00
					..(ATTACHING PARTS)		
-164	211-0022-00			2	..SCREW,MACHINE:2-56 X 0.188,PNH,STL	TK0435	ORDER BY DESCR
-165	210-0001-00			1	..WASHER,LOCK:#2 INTL,0.013 THK,STL	77900	1202-00-00-0541C
-166	210-0259-00			1	..TERMINAL,LUG:0.099 ID,LOCKING,BRS CD PL	80009	210-0259-00
					..(END ATTACHING PARTS)		
-167	384-1028-00			1	..SHAFT,CAM SW:EXT,3.15 L X 0.248 OD	80009	384-1028-00
-168	384-1027-00			1	..EXTENSION SHAFT:9.52 L X 0.081 OD,SST	80009	384-1027-00
					..(ATTACHING PARTS)		
	376-0039-00	B010100	B153239	1	..CPLG,SHAFT,RGD:0.082 & 0.128 ID,AL	80009	376-0039-00
	376-0050-00	B153240		1	..CPLG,SHAFT,FLEX:0.081 & 0.127 ID,PP	80009	376-0050-00
	213-0075-00			2	..SETSCREW:4-40 X 0.094,STL	74445	ORDER BY DESCR
-169	354-0391-00			1	..RING,RETAINING:BASIC EXT,U/O 0.438 DIA SFT	79136	5100-43 MD
					..(END ATTACHING PARTS)		
					.(ATTACHING PARTS FOR CAM SW)		
-170	211-0116-00	B020000	B141759	4	.SCR,ASSEM WSHR:4-40 X 0.312,PNH,BRS,NP,POZ	77900	ORDER BY DESCR
	211-0292-00	B141760		4	.SCR,ASSEM WSHR:4-40 X 0.29,PNH,BRS NI PL	78189	51-040445-01
					.(END ATTACHING PARTS)		
					(ATTACHING PARTS FOR A3)		
-171	211-0116-00			1	SCR,ASSEM WSHR:4-40 X 0.312,PNH,BRS,NP,POZ	77900	ORDER BY DESCR
-172	211-0001-00			2	SCREW,MACHINE:2-56 X 0.25,PNH,STL	TK0435	ORDER BY DESCR
-173	210-0001-00			1	WASHER,LOCK:#2 INTL,0.013 THK,STL	77900	1202-00-00-0541C
-174	210-0259-00			1	TERMINAL,LUG:0.099 ID,LOCKING,BRS CD PL	80009	210-0259-00
					(END ATTACHING PARTS)		
-175	384-1032-00			1	SHAFT,CAM SW:6.812 L X 0.156 OD STA	80009	384-1032-00
-176	----- -----			1	CKT BOARD ASSY:FLOATING CONN(SEE A6 REPL)		
	136-0252-07	B060000		3	.SOCKET,PIN CONN:W/O DIMPLE	22526	75060-012
-177	175-0825-00			AR	.CABLE,SP,ELEC:2,26 AWG,STRD,PVC JKT,RBN	80009	175-0825-00
-178	175-0831-00			AR	.CABLE,SP,ELEC:8,26 AWG,STRD,PVC INSUL,RBN	08261	111-2699-971
-179	131-0707-00			18	.CONTACT,ELEC:22-26 AWG,BRS,CU BE GLD PL	22526	47439-000
-180	352-0169-03			1	.HLDR,TERM CONN:2 WIRE,ORANGE	80009	352-0169-03
-181	352-0166-04			1	.HLDR,TERM CONN:8 WIRE,YELLOW	80009	352-0166-04
-182	352-0167-05	B020000	B029999	1	.HLDR,TERM CONN:9 WIRE,GREEN	80009	352-0167-05
	352-0166-06	B030000		1	.HLDR,TERM CONN:8 WIRE,BLUE	80009	352-0166-06
	175-9224-00	B153240		1	CABLE ASSY,RF:50 OHM COAX,13.0 L,9-N	80009	175-9224-00
					(FROM A1J120-2 TO A4P956)		
-183	----- -----			1	CKT BOARD ASSY:HORIZONTAL(SEE A4 REPL)		
-184	136-0260-00	B020000	B020149	2	.SKT,PL-IN ELEK:MICROCIRCUIT,16 DIP,PCB MT	71785	133-51-92-008
	136-0260-02	B020150	B142294	2	.SKT,PL-IN ELEK:MICROCIRCUIT,16 DIP	09922	DILB16P-108T
	136-0729-00	B142295		2	.SKT,PL-IN ELEK:MICROCKT,16 CONTACT	09922	DILB16P-108T
-185	136-0252-07	B010100	B153239	27	.SOCKET,PIN CONN:W/O DIMPLE	22526	75060-012
-186	136-0269-02	B010100	B142294	1	.SKT,PL-IN ELEK:MICROCIRCUIT,14 DIP	09922	DILB14P-108T
	136-0728-00	B142295	B153239	1	.SKT,PL-IN ELEK:MICROCKT,14 CONTACT	09922	DILB14P-108
-187	136-0220-00	B020000	B141979	28	.SKT,PL-IN ELEK:TRANSISTOR 3 CONTACT	71785	133-23-11-034
	136-0252-07	B141980	B153239	84	.SOCKET,PIN CONN:W/O DIMPLE	22526	75060-012
-188	214-0579-00	B010100	B153239	11	.TERM,TEST POINT:BRS CD PL	80009	214-0579-00
-189	131-0566-00			2	.BUS,CONDUCTOR:DUMMY RES,0.094 OD X 0.225 L	24546	OMA 07
-190	136-0235-00	B010100	B153239	1	.SKT,PL-IN ELEK:TRANSISTOR,6 CONTACT	71785	133-96-12-062
-191	----- -----			1	.SWITCH,SLIDE:(SEE S901 REPL)		
					.(ATTACHING PARTS FOR A4)		
-192	211-0116-00	B020000	B141759	2	SCR,ASSEM WSHR:4-40 X 0.312,PNH,BRS,NP,POZ	77900	ORDER BY DESCR
	211-0292-00	B141760		2	SCR,ASSEM WSHR:4-40 X 0.29,PNH,BRS NI PL	78189	51-040445-01
-193	361-0095-00			2	SPCR,POST:0.795 L W/4-40 THD EA END,BRS NP,	80009	361-0095-00
					0.188 HEX		
					(END ATTACHING PARTS)		
-194	----- -----			1	CKT BOARD ASSY:VERTICAL(SEE A2 REPL)		
-195	136-0220-00			18	.SKT,PL-IN ELEK:TRANSISTOR 3 CONTACT	71785	133-23-11-034
-196	136-0235-00			2	.SKT,PL-IN ELEK:TRANSISTOR,6 CONTACT	71785	133-96-12-062
-197	214-0579-00			11	.TERM,TEST POINT:BRS CD PL	80009	214-0579-00

Fig. & Index No.	Tektronix Part No.	Serial/Assembly No. Effective	Dscont	Qty	12345 Name & Description	Mfr. Code	Mfr. Part No.
1-					.(ATTACHING PARTS FOR A2)		
-198	211-0116-00	B020000	B141759	2	SCR,ASSEM WSHR:4-40 X 0.312,PNH,BRS,NP,POZ	77900	ORDER BY DESCR
	211-0292-00	B141760		2	SCR,ASSEM WSHR:4-40 X 0.29,PNH,BRS NI PL (END ATTACHING PARTS)	78189	51-040445-01
-199	384-1070-00			1	EXTENSION SHAFT:3.2 L X 0.25 OD BRS	80009	384-1070-00
-200	351-0087-02			4	GUIDE,CKT BOARD:4.75 L,POLYCARBONATE,SILVER GRAY	80009	351-0087-02
-201	407-0841-00			1	BRKT,CKT BD GUI:ALUMINUM (ATTACHING PARTS)	80009	407-0841-00
-202	211-0008-00			8	SCREW,MACHINE:4-40 X 0.25,PNH,STL	93907	ORDER BY DESCR
-203	129-0098-00			4	SPACER,POST:0.406 L,4-40 THRU,BRS,CD PL (END ATTACHING PARTS)	80009	129-0098-00
-204	386-1855-00			1	PANEL,REAR: (ATTACHING PARTS)	80009	386-1855-00
-205	213-0192-00			8	SCREW,TPG,TF:6-32 X 0.5,SPCL TYPE,FILH,STL (END ATTACHING PARTS)	87308	ORDER BY DESCR
-206	351-0217-00	B010100	B164378	1	GUIDE,CKT BOARD:SIL GRAY DELRIN,4.7 L	80009	351-0217-00
	386-5467-00	B164379		1	GUIDE,CKT BRD:4.7 L,MULTIPLE WIDTH PLUG-IN (ATTACHING PARTS)	80009	386-5467-00
-207	211-0507-00			4	SCREW,MACHINE:6-32 X 0.312,PNH,STL	83385	ORDER BY DESCR
-208	220-0556-00			4	NUT,SLEEVE:6-32 X 0.344 HEX X 0.15 BRS (END ATTACHING PARTS)	80009	220-0556-00
-209	351-0217-00			1	GUIDE,CKT BOARD:SIL GRAY DELRIN,4.7 L (ATTACHING PARTS)	80009	351-0217-00
-210	211-0507-00			4	SCREW,MACHINE:6-32 X 0.312,PNH,STL	83385	ORDER BY DESCR
-211	220-0557-00			4	NUT,SLEEVE:6-32 X 0.204 OD BRS CD PL (END ATTACHING PARTS)	80009	220-0557-00
-212	351-0284-00			1	GUIDE,SLIDE: (ATTACHING PARTS)	80009	351-0284-00
-213	213-0192-00	B020000	B141929	2	SCREW,TPG,TF:6-32 X 0.5,SPCL TYPE,FILH,STL	87308	ORDER BY DESCR
	213-0793-00	B141930		2	SCREW,TPG,TF:6-32 X 0.4375,TAPTITE,FILH (END ATTACHING PARTS)	83486	239-006-406043
-214	131-0410-00			2	CONN,RCPT,ELEC:COAXIAL CONTACTS,RTANG PLUG (ATTACHING PARTS)	13556	DM53741-5001
	343-0190-00			1	RTNR,ELEC CONN:ALUMINUM	80009	343-0190-00
-215	354-0331-00			1	RING,RTNG:EXT BOWED E,U/O 0.219 DIA SFT (END ATTACHING PARTS)	79136	5131-X-21MD
-216	179-1635-00			1	WIRING HARNESS:FXD SHOE	80009	179-1635-00
-217	131-0621-00			2	.CONN,TERM:22-26 AWG,BRS,CU BE GLD PL	22526	46231-000
	131-0622-00			2	.CONTACT,ELEC:28-32 AWG,BRS & CU BE GLD PL	22526	46241-000
-218	131-0707-00			1	.CONTACT,ELEC:22-26 AWG,BRS,CU BE GLD PL	22526	47439-000
	131-0708-00			1	.CONTACT,ELEC:28-32 AWG,BRS,CU BE GLD PL	22526	47437-000
	131-0792-00			2	.CONNECTOR,TERM:18-20 AWG,CU BE GOLD PL	22526	46221
	131-0842-00			1	.TERMINAL,LUG:0.76 ID X 0.225 L,BRS CD PL	80009	131-0842-00
-219	352-0162-08			1	.HLDR,TERM CONN:4 WIRE,GRAY	80009	352-0162-08
-220	352-0198-08			1	.HLDR,TERM CONN:2 WIRE,GRAY	80009	352-0198-08
	352-0198-09			1	.HLDR,TERM CONN:2 WIRE,WHITE	80009	352-0198-09
-221	175-0825-00			AR	CABLE,SP,ELEC:2,26 AWG,STRD,PVC JKT,RBN	80009	175-0825-00
-222	175-0826-00			AR	CABLE,SP,ELEC:3,26 AWG,STRD,PVC JKT,RBN	80009	175-0826-00
-223	175-0827-00			AR	CABLE,SP,ELEC:4,26 AWG,STRD,PVC JKT,RBN	08261	111-2699-954
-224	175-0828-00			AR	CABLE,SP,ELEC:5,26 AWG,STRD,PVC JKT,RBN	08261	111-2699-955
-225	175-0829-00			AR	CABLE,SP,ELEC:6,26 AWG,STRD,PVC JKT,RBN	08261	111-2699-973
-226	131-0375-00			1	CONN,PLUG,ELEC:SNAP-ON FEMALE	24931	32P-111-1
-227	131-0707-00			49	CONTACT,ELEC:22-26 AWG,BRS,CU BE GLD PL	22526	47439-000
-228	352-0161-02			1	HLDR,TERM CONN:3 WIRE,RED	80009	352-0161-02
-229	352-0162-00			1	HLDR,TERM CONN:4 WIRE,BLACK	80009	352-0162-00
	352-0162-01			1	HLDR,TERM CONN:4 WIRE,BROWN	80009	352-0162-01
	352-0162-02			1	HLDR,TERM CONN:4 WIRE,RED	80009	352-0162-02
	352-0162-05			1	HLDR,TERM CONN:4 WIRE,GREEN	80009	352-0162-05
	352-0162-06			1	HLDR,TERM CONN:4 WIRE,BLUE	80009	352-0162-06
-230	352-0163-04			1	HLDR,TERM CONN:5 WIRE,YELLOW	80009	352-0163-04
-231	352-0164-03			1	HLDR,TERM CONN:6 WIRE,ORANGE	80009	352-0164-03
-232	352-0169-00			1	HLDR,TERM CONN:2 WIRE,BLACK	80009	352-0169-00
	352-0169-01			1	HLDR,TERM CONN:2 WIRE,BROWN	80009	352-0169-01
	352-0169-04			1	HLDR,TERM CONN:2 WIRE,YELLOW	80009	352-0169-04
	352-0169-05			1	HLDR,TERM CONN:2 WIRE,GREEN	80009	352-0169-05
	352-0169-07			2	HLDR,TERM CONN:2 WIRE,VIOLET	80009	352-0169-07
-233	175-1020-00	B020000	B120714	1	CABLE,RF:50 OHM COAX,WHT POLYTHN JKT	90484	DAB70J AAA WHITE

Fig. & Index No.	Tektronix Part No.	Serial/Assembly No. Effective	Dscont	Qty	12345	Name & Description	Mfr. Code	Mfr. Part No.
1-	175-1768-00	B120715		1		CABLE ASSY,RF:50 OHM COAX,7.0 L	80009	175-1768-00

FIG. 1 EXPLODED

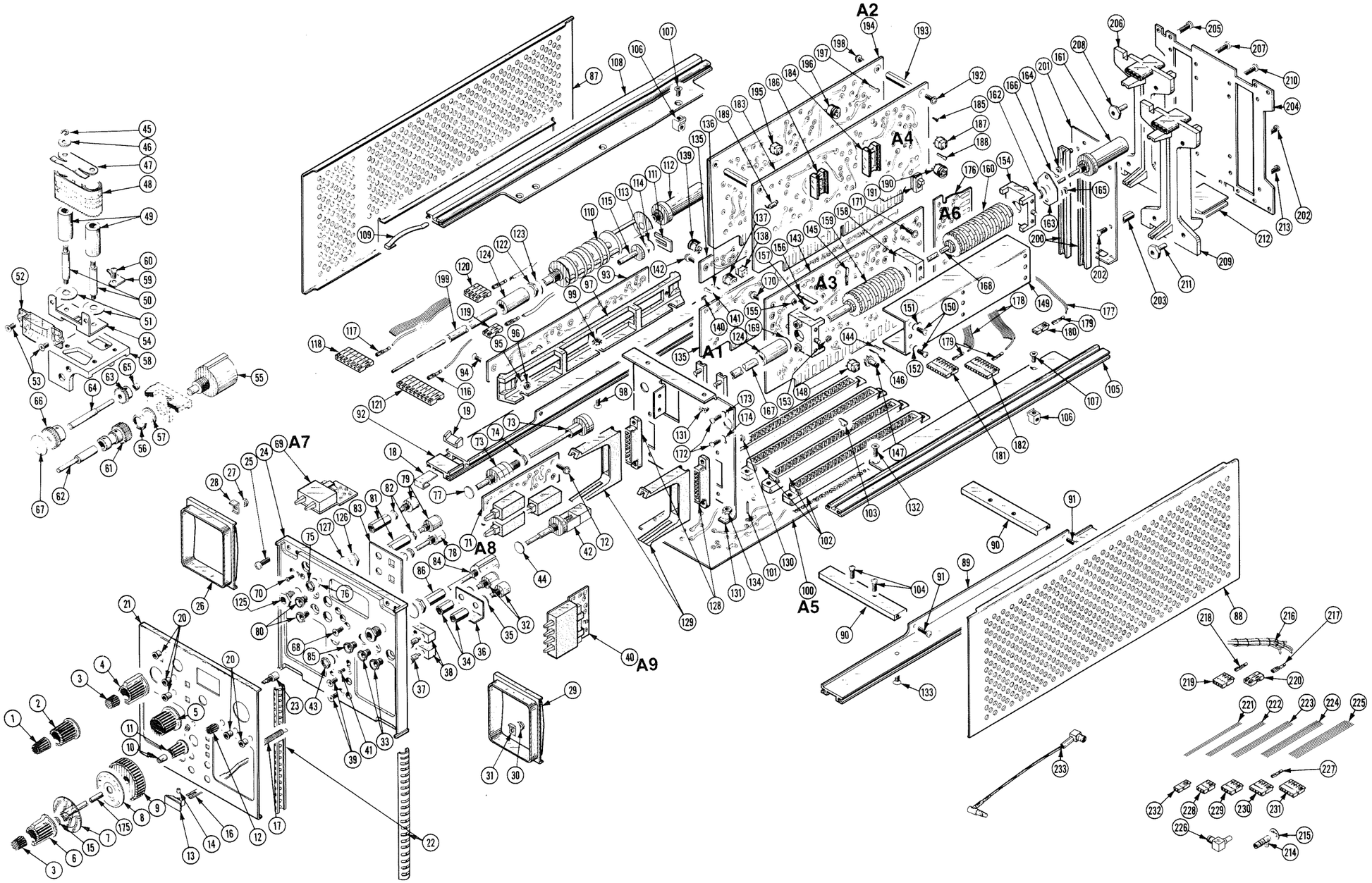

7S12 TDR SAMPLING UNIT (SN B020000-up)

REV FEB 1985

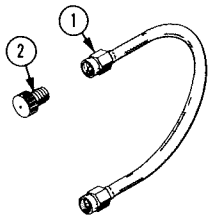

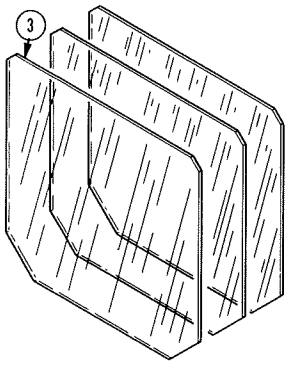

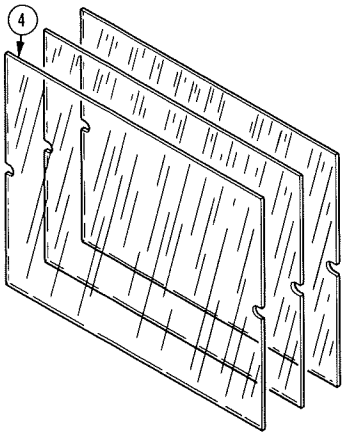

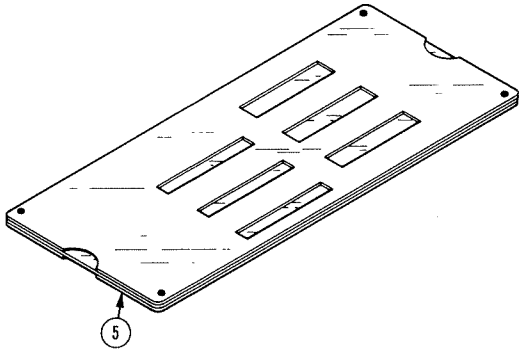

Fig. & Index No.	Tektronix Part No.	Serial/Model No. Eff	Dscont	Qty	1 2 3 4 5	Name & Description	Mfr Code	Mfr Part Number
						STANDARD ACCESSORIES		
-1	015-1017-01			1		DELAY LINE,ELEC:50 OHM,0.75 NANO SEC	80009	015-1017-01
-2	015-1021-00			1		TERMN,COAXIAL:SHORT CIRCUIT,SMA	26805	2020-4136-00
-3	331-0296-00			1		OVERLAY SET,CRT:SET OF 3	80009	331-0296-00
-4	331-0297-00			1		OVERLAY SET,CRT:SET OF 3	80009	331-0297-00
-5	003-0700-00			1		SLIDE RULE:TDR	80009	003-0700-00
	070-1244-00			1		MANUAL,TECH:INS:RUCTION	80009	070-1244-00

Fig. & Index No.	Tektronix Part No.	Serial/Assembly No. Effective	Dscont	Qty	12345	Name & Description	Mfr. Code	Mfr. Part No.
2-						STANDARD ACCESSORIES		
-1	015-1017-01			1		DELAY LINE,ELEC:50 OHM,0.75 NANO SEC	80009	015-1017-01
-2	015-1021-00			1		TERMN,COAXIAL:SHORT CIRCUIT,SMA	26805	2020-1314-00
-3	331-0296-00			1		OVERLAY SET,CRT:SET OF 3	22670	ORDER BY DESCR
-4	331-0297-00			1		OVERLAY SET,CRT:SET OF 3	80009	331-0297-00
-5	003-0700-00			1		SLIDE RULE:TDR	80009	003-0700-00
	070-1244-00			1		MANUAL,TECH:INSTR	80009	070-1244-00

MANUAL CHANGE INFORMATION

At Tektronix, we continually strive to keep up with latest electronic developments by adding circuit and component improvements to our instruments as soon as they are developed and tested.

Sometimes, due to printing and shipping requirements, we can't get these changes immediately into printed manuals. Hence, your manual may contain new change information on following pages.

A single change may affect several sections. Since the change information sheets are carried in the manual until all changes are permanently entered, some duplication may occur. If no such change pages appear following this page, your manual is correct as printed.

Tektronix®
COMMITTED TO EXCELLENCE

MANUAL CHANGE INFORMATION

Date: 9/30/87 Change Reference M64896 Rev.

Product: 7S12 TDR/SAMPLER S/N B020000-UP Manual Part No. 070-1244-00

DESCRIPTION PG. 42

These changes are effective at Serial Number B164362 **Revised 11/4/87**

ELECTRICAL PARTS LIST & SCHEMATIC CHANGES

REMOVE:

C608	281-0775-00	CAP,FXD,CER DI:0.1UF,20%,50V
C613	281-0775-00	CAP,FXD,CER DI:0.1UF,20%,50V
C652	283-0812-00	CAP,FXD,CER DI:1000PF,10%,100V
C657	281-0812-00	CAP,FXD,CER DI:1000PF,10%,100V
C678	281-0775-00	CAP,FXD,CER DI:0.1UF,20%,50V
C681	281-0775-00	CAP,FXD,CER DI:0.1UF,20%,50V
C686	283-0212-00	CAP,FXD,CER DI:2UF,20%,50V
CR681	152-0141-02	SEMICOND DVC,DI:SW,SI,30V,150MA
CR686	152-0141-02	SEMICOND DVC,DI:SW,SI,30V,150MA
Q610	151-0164-00	TRANSISTOR:PNP,SI,TO-92
Q650	151-0164-00	TRANSISTOR:PNP,SI,TO-92
Q680	151-0164-00	TRANSISTOR:PNP,SI,TO-92
Q682	151-0244-00	TRANSISTOR:NPN,SI,TO-92
Q686	151-0164-00	TRANSISTOR:PNP,SI,TO-92
R612	315-0102-00	RES,FXD,FILM:1K OHM,5%,0.25W
R613	301-0243-00	RES,FXD,FILM:24K OHM,5%,0.5W
R650	301-0123-00	RES,FXD,FILM:12K OHM,5%,0.5W
R652	315-0101-00	RES,FXD,FILM:100 OHM,5%,0.25W
R656	315-0102-00	RES,FXD,FILM:1K OHM,5%,0.25W
R657	315-0101-00	RES,FXD,FILM:100 OHM,5%,0.25W
R658	301-0113-00	RES,FXD,FILM:11K OHM,5%,0.5W
R663	315-0102-00	RES,FXD,FILM:1K OHM,5%,0.25W
R666	315-0102-00	RES,FXD,FILM:1K OHM,5%,0.25W
R680	315-0243-00	RES,FXD,FILM:24K OHM,5%,0.25W
R681	315-0101-00	RES,FXD,FILM:100 OHM,5%,0.25W
R686	315-0163-00	RES,FXD,FILM:16K OHM,5%,0.25W
R695	315-0104-00	RES,FXD,FILM:100K OHM,5%,0.25W
R696	315-0104-00	RES,FXD,FILM:100K OHM,5%,0.25W
R698	315-0104-00	RES,FXD,FILM:100K OHM,5%,0.25W
R699	315-0104-00	RES,FXD,FILM:100K OHM,5%,0.25W

DESCRIPTION

CHANGE TO:

A4	670-1314-09	CKT BD ASSY:HORIZONTAL
R654	321-0289-00	RES,FXD,FILM:10K OHM,1%0.125W
R682	321-0449-00	RES,FXD,FILM:464K OHM,1%,0.125W
R684	321-0356-00	RES,FXD,FILM:49.9K OHM,1%0.125W
U620	156-1200-00	MICROCKT,LINEAR:OPNL AMP,QUAD
U650	156-1200-00	MICROCKT,LINEAR:OPNL AMP,QUAD

ADD:

W612	131-0566-00	BUS,CONDUCTOR:DUMMY RES
W656	131-0566-00	BUS,CONDUCTOR:DUMMY RES
W663	131-0566-00	BUS,CONDUCTOR:DUMMY RES
W666	131-0566-00	BUS,CONDUCTOR:DUMMY RES

The above parts are located on the A4 HORIZONTAL BOARD and are shown on diagrams ⟨6⟩ SLOW RAMP & HORIZ DRIVE, and diagram ⟨7⟩ TIME-DISTANCE, LOCATE & SLOW RAMP INVERTER

Partials included—

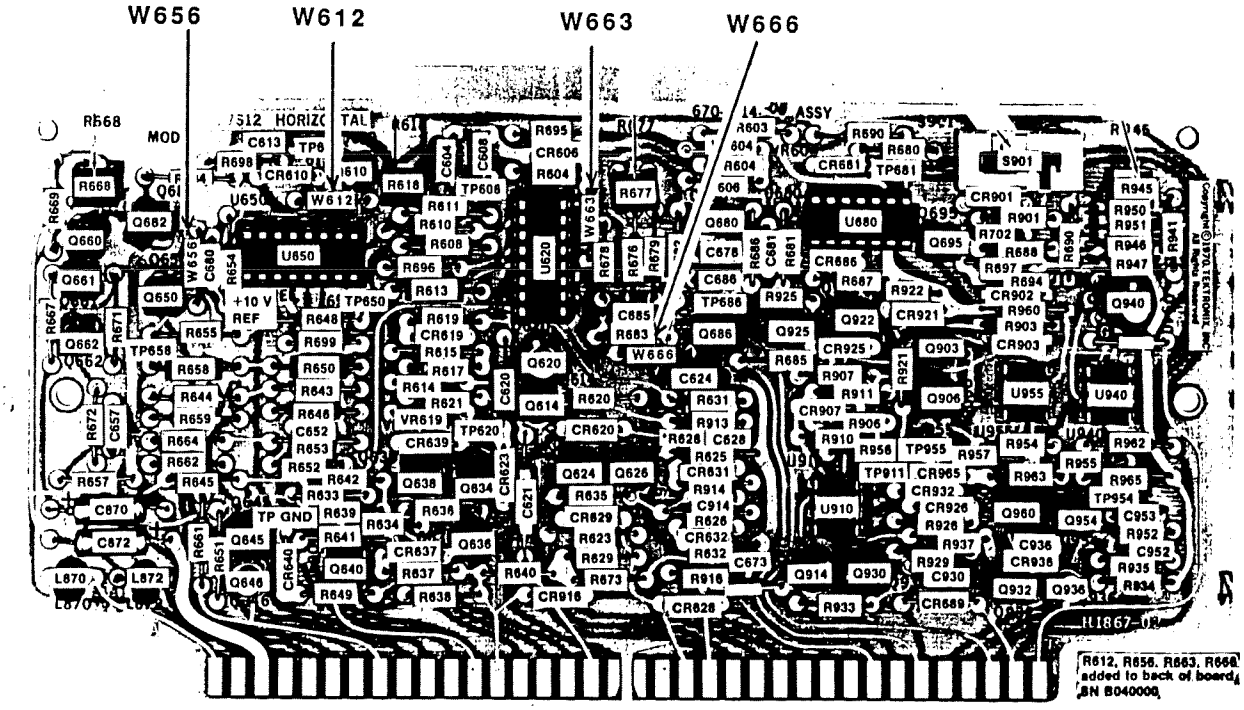

Fig. 7-4a. Assembly A-4, Horizontal Card (SN B10000 & up).

DESCRIPTION

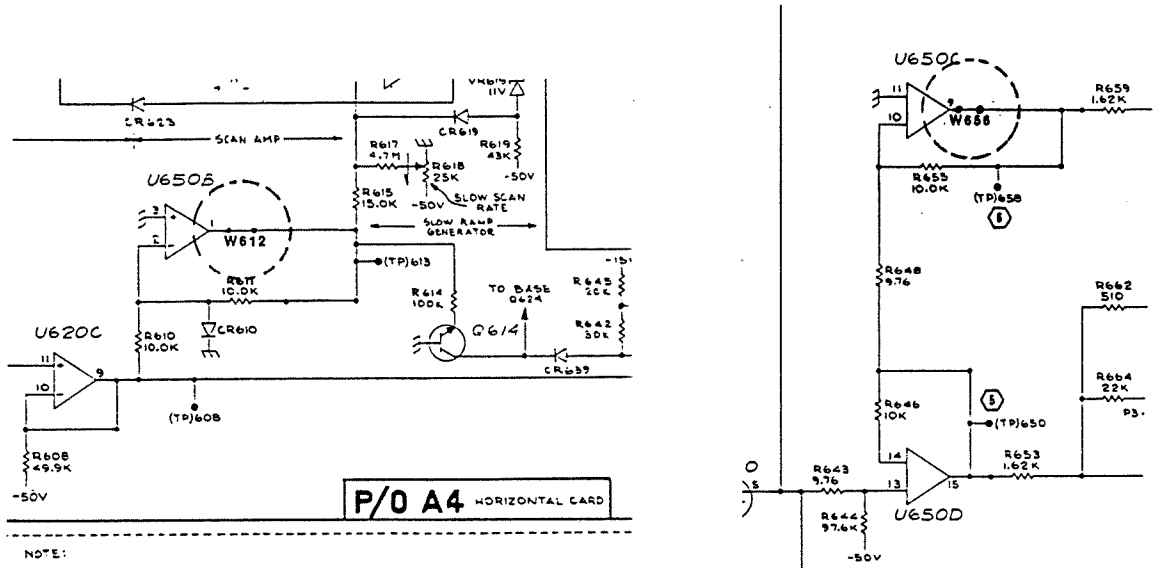

SLOW RAMP & HORIZ DRIVE 6

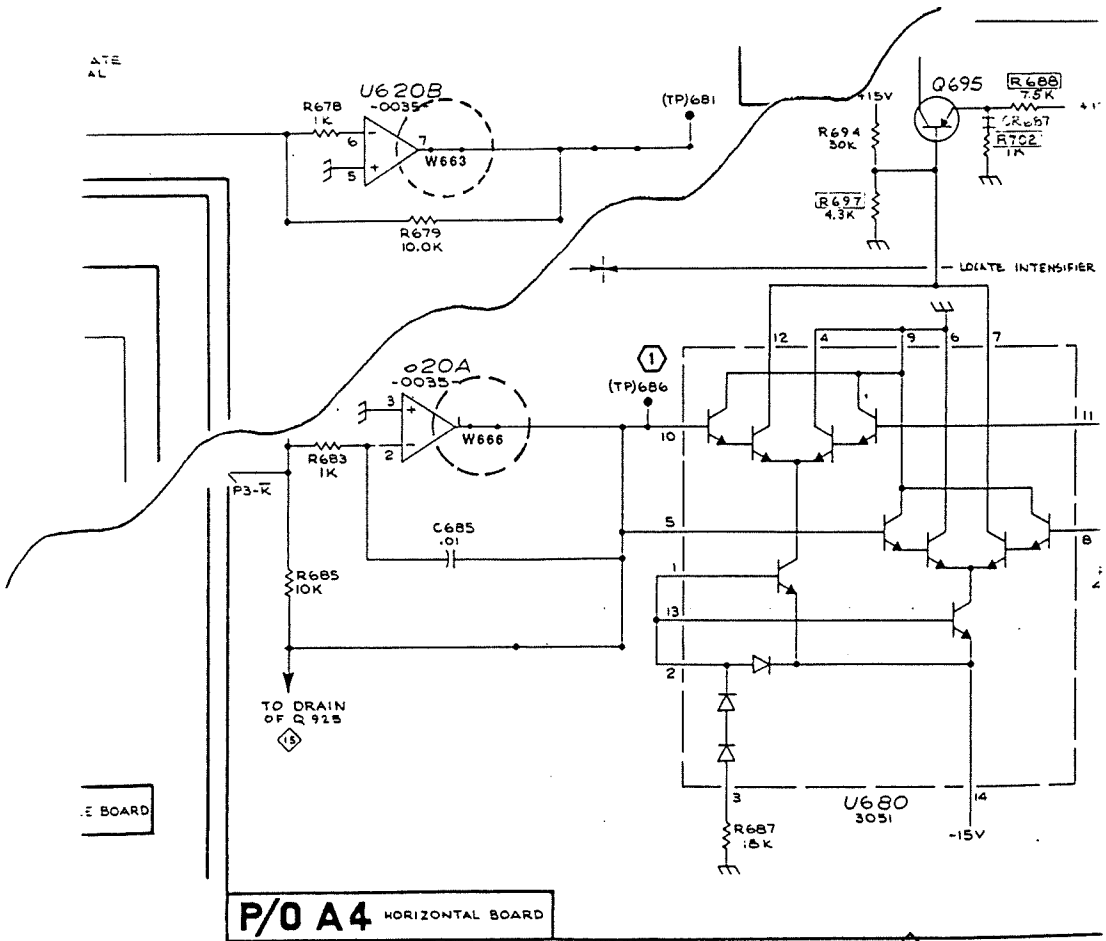

TIME-DISTANCE, LOCATE & SLOW RAMP INVERTER 7

DESCRIPTION

MECHANICAL PARTS LIST CHANGES

REMOVE:

Fig. 1-184	136-0729-00	SKT,PL-IN ELEK:MICROCKT,16 CONTACT

Tektronix®
COMMITTED TO EXCELLENCE

MANUAL CHANGE INFORMATION

Date: 5/6/88 Change Reference: C110/0588

Product: All 7000 Service manuals

Manual Part No.: see product

Product Group: 42

DESCRIPTION

Effective for all serial numbers.

REPLACEABLE ELECTRICAL PARTS LIST CHANGE

The part number has changed for a transistor which may be used in your 7000-Series product. Part number 151-0220-00 has changed to 151-0220-07. Use the new 151-0220-07 part number when ordering a replacement for transistors listed as151-0220-00 in your Replaceable Electrical Parts List.

Tektronix®
COMMITTED TO EXCELLENCE

MANUAL CHANGE INFORMATION

Date: 6/6/88 Change Reference: C120/0688

Product: All 7000 Service manuals

Manual Part No.: 7000 Service

Product Group: 42

DESCRIPTION

This change is effective for all serial numbers.

REPLACEABLE PARTS LIST CHANGE

Most berg sockets, part number 136-0252-07, have been removed from this 7000 series instrument to facilitate assembly and improve reliability.

Tektronix®
COMMITTED TO EXCELLENCE

MANUAL CHANGE INFORMATION

Date: 5/6/88 Change Reference: C110/0588

Product: All 7000 Service manuals

Manual Part No.: see product

Product Group: 42

DESCRIPTION

Effective for all serial numbers.

REPLACEABLE ELECTRICAL PARTS LIST CHANGE

The part number has changed for a transistor which may be used in your 7000-Series product. Part number 151-0220-00 has changed to 151-0220-07. Use the new 151-0220-07 part number when ordering a replacement for transistors listed as151-0220-00 in your Replaceable Electrical Parts List.

Tektronix®
COMMITTED TO EXCELLENCE

MANUAL CHANGE INFORMATION

Date: 6/6/88 Change Reference: C120/0688

Product: All 7000 Service manuals

Manual Part No.: 7000 Service

Product Group: 42

DESCRIPTION

This change is effective for all serial numbers.

REPLACEABLE PARTS LIST CHANGE

Most berg sockets, part number 136-0252-07, have been removed from this 7000 series instrument to facilitate assembly and improve reliability.